Let's grow together

Operation Manual

F4201

Electric pallet truck

Part No.508000005693
V1 02/2023

EP EQUIPMENT CO.,LTD. is one of the world's leading companies manufacture, which design material handling equipment and provide related service. With over 100,000 square metres plant it produces over 100,000 trucks per year, and provides professional, effective and optimized material handling solutions worldwide, until now it has developed three major kinds of business:

- Material handling equipment: Focus on electric forklift and warehouse equipment
- OEM parts: Global parts supply
- Imow industry,online: One-stop industrial products supply

Guided by our customer-oriented concept, EP has developed service centers in more than 30 countries around the world, from which customers are able to receive timely local service. Moreover, 95% of warranty parts can be shipped out within 24 hours after been ordered. Through our online after-sales service system, customers can process their warranty claims, order spare parts and consult the operation manuals, maintenance materials and spare parts catalogs.

With business all over the world, EP has thousands of employees and hundreds of agents worldwide to provide our global customers with prompt local service.

Based on the concept of sharing economy, EP also offer rental service for various logistics equipment. Adhering to the idea "Making the leasing of logistic equipment more simple", EP is devoted to providing customized one-stop leasing solutions for our customers with our high quality, reasonable price and prompt rental service.

EP's mission&vision is " Let more people apply the electrical material handling equipment to relieve the intensity of labour" and "Let's grow together".

EP EQUIPMENT CO., LTD
Address: No.1 Xiaquan Village, Lingfeng Street, Anji, Huzhou, Zhejiang
Tel: + 86-0571-28023920
Website: www.ep-ep.com
Email: service@ep-ep.com

Preface

Thank you for buying our products.

The manual will show you the way of correctly using the truck as well as relevant preventive maintenance and safety operation. The truck should be operated only by well-trained professionals and by no means by non-working personnel. Operators are supposed to read through the manual before actually operating the truck.

Explanations on the manual

With the continuous upgradation and improvement of our company's products, you may find a slight difference existing between your carrier and some introductions in the manual.

All the information, specifications and illustrations in the manual are effective in times of printing and our company maintains the right to modify the specification (s) or design (s) of our products at any time without any beforehand notification.

Safety signs and corresponding esplations

DANGER

Means that failure to comply can cause risk to life and/or major damage to property.

WARNING

Please strictly adhere to these safety instructions to avoid personal injury or major damage to equipment.

CAUTION

Please pay attention to the important safety instructions.

NOTE

Pay attention to Instruction.

Internet address and QR code of Parts manual

By entering the address http://www.ep-care.com in a web browser or by
scanning the QR code, Login after registration, Select "Parts purchase"
function and input part number or model name to find the truck.

NOTE: After registration, please send email to info@ep-care.com to activate your account

Fig0000-00017OM

Intended use

The truck is designed for transporting and lifting the loads stated in the nameplate. In particular we refer to:

• the safety rules of your trade association.
• In accordance with the special provisions for driving on public roads specified by national specifications.
• Other local regulations.

The rules for the intended and approved use of industrial trucks must be followed under all circumstances by the responsible persons, especially by the operator and service personnel.
The user, and not manufacturer is responsible for any danger arising from applications not authorised by the manufacturer.
If you want to use the truck for applications not mentioned in this manual, please first contact your authorised dealer.
No changes, particularly no modifications and additions, may be made to the truck without the approval of the manufacturer.

Technical description

- The truck consists of robust steel chassis and is driving on a traction wheel and 2 load wheels, providing for good stability even with high loads.
- The truck will be stopped by a regenerative service brake and hold by an automatic electromagnetic parking brake in it's parking position.
- The load is lifted by a hydraulic cylinder that activates a lifting shaft that transmits the lifting movement by a push-rod to the load wheels.
- The control handle is used for smooth steering and control of drive speed, lifting and lowering, braking and the horn without changing the position of the hand. The long tiller shaft allows effortless steering and a safe distance to the truck. A spring returns the control handle always into a vertical position that activates the brake automatically.
- F series using the new original chassis design of EP, can be split front and rear frame. The F4201 can be equipped with two lithium-ion battery, when the one is low power, it can be removed from side effortlessly, the rest battery can still support the truck to work.
- An electronic controller operates all electric functions and guaranties safety.
- Adopted single-cylinder two-connecting rod structure is simple and reliable, with good lifting synchronism.
- A key switch secures the truck from unauthorized use.
- The ergonomic design of the truck guaranties safe and easy operation.

Schematic views

This manual is used for operation and maintenance, the detail parameters, size and specifications in context is only for reference , the real parameters will depend on sale files.

Manual pictures for reference only, the real car shall prevail, and shall not affect the manual use. Manual pictures only sign for one of the models in this series models.

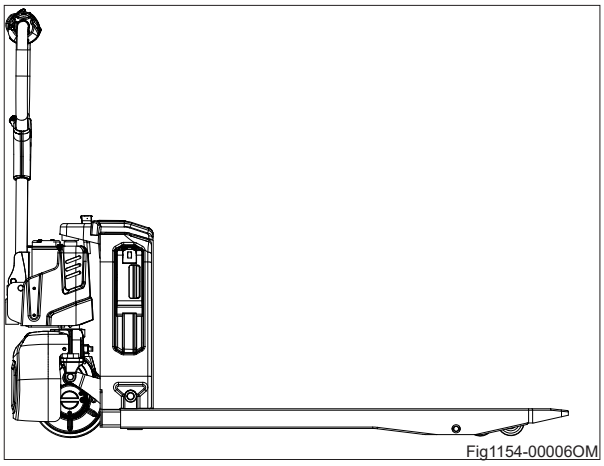
Fig1154-00006OM

● Obligations and responsibilities of equipment user

In the manual, “equipment user” refers to any natural person or legal person directly using or appointing or authorizing others to use the carrier. In such special situations as renting or sales, the “equipment user” represents the interested parties supposed to bear operation obligations as specified by the contractual terms concluded between equipment owner and corresponding users. Equipment users must ensure the use of the carrier only for purposes specified and timely eliminate all the dangers that may threaten the life and health of the users themselves or any other third party, in addition to which they must also strictly abide by accident prevention provisions, other safety technology provisions and equipment operation, maintenance and repair guidelines, and ensure that all the operators seriously read and completely understand the contents of the operation instruction.

Should any violation of the operation instruction occur, the quality guarantee of our company will be invalid automatically, and our company will assume none of the responsibilities for losses resulting from any nonstandard operation of the equipment implemented by any client, equipment user or any third party without the authorization of the client service department of our company.

● Modification

Unauthorized modification to the truck can result in injury or death.
Can not remove, disable or modify any safeguards or other safety devices.
Exception:Only in the event that the truck manufacturer is no longer in business and there is no successor in the interest to the business, may the user arrange for a modification or alteration to a powered industrial truck, provided, however, that the user

a) arranges for the modification or alteration to be designed, tested and implemented by an engineer(s) expert in industrial trucks and their safety.
b)maintains a permanent record of the design, test(s) and implementation of the modification or alteration.
c) approves and makes appropriate changes to the capacity plate(s), decals, tags and operation manual.
d) affixes a permanent and readily visible label to the truck stating the manner in which the truck has been modified or altered, together with the date of the modification or alteration and the name and address of the organization that accomplished those tasks.

● Wind loads

Wind forces can affect the stability of a truck when lfting, lowering and transporting loads with large surface areas .
Light loads must be especially secured when they are subjected to wind forces. This will prevent the load from sliding or falling.
Stop the truck in both cases.

Table of contents

Table of contents

A Introduction

Item	Description
1	Sling point
2	Rated capacity label
3	Model designation label
4	Read Instructions handbooks before operation label
5	Anti-pinch hand label
6	Nameplate
7	Do not rest on the truck label
8	Anti-pinch label

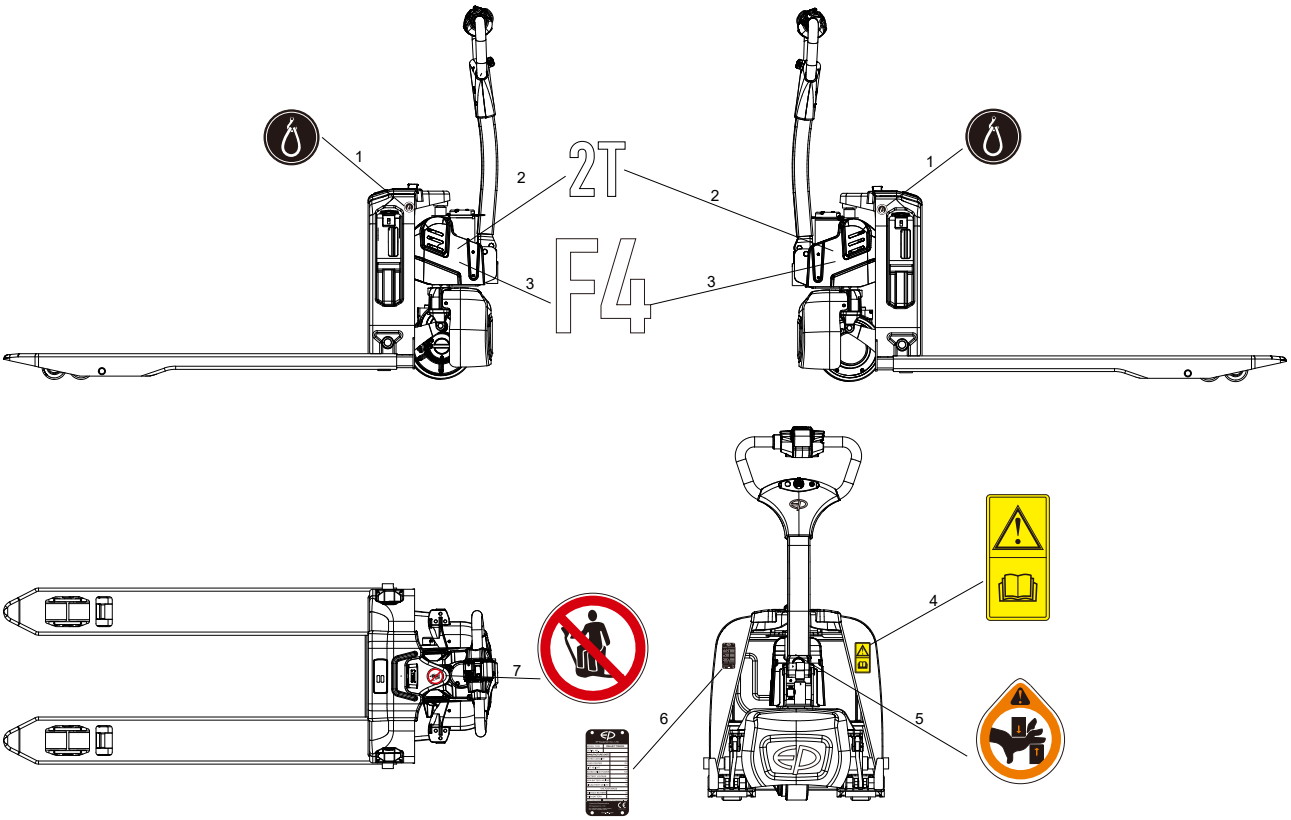

➢ Nameplate

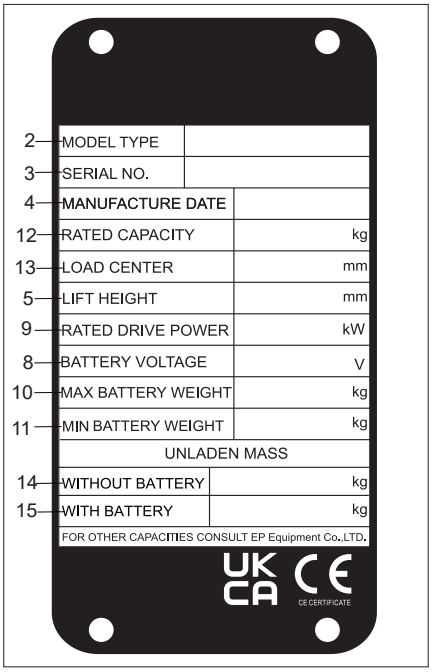

Item	Description
2	MODEL TYPE
3	SERIAL NO.
4	MANUFACTURE DATE
5	LIFT HEIGHT
8	BATTERY VOLTAGE
9	RATED DRIVE POWER
10	MAX BATTERY WEIGHT
11	MIN BATTERY WEIGHT
12	RATED CAPACITY
13	LOAD CENTER
14	UNLADEN MASS WITHOUT BATTERY
15	UNLADEN MASS WITH BATTERY

➢ Hoisting

- Remove the load before hoisting the pallet truck.
- Disconnect the power supply.
- Attach slings in the positions identified by the hook symbol.

DANGER

Personnel must not stand below or near the truck when the pallet truck is being lifted.

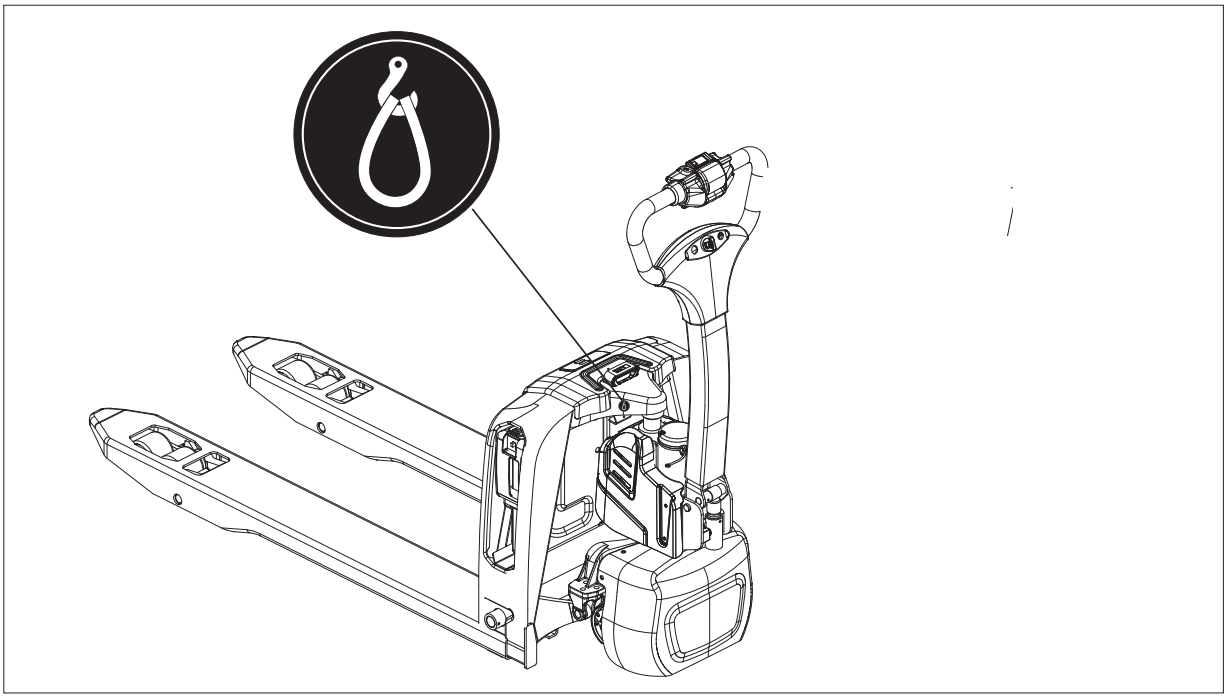

1.2 Utilization safety specification

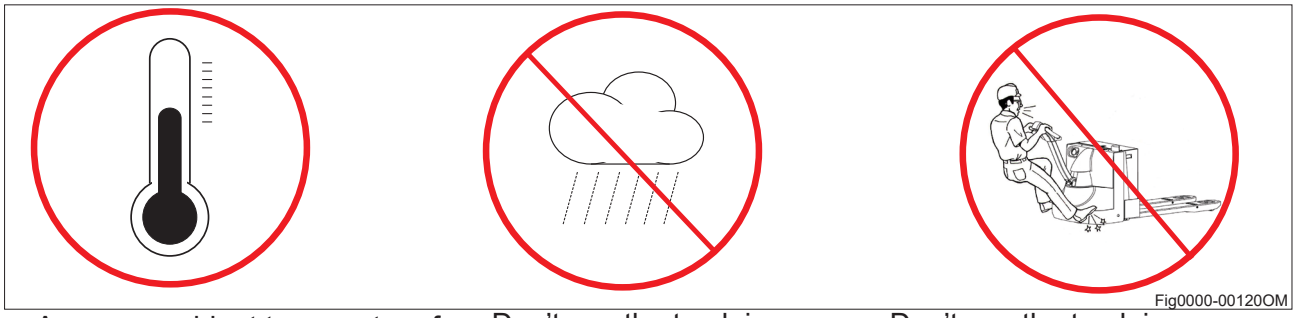

- Average ambient temperature for continuous duty: ＋ 25℃ ;
- Maximum ambient temperature, short term (up to 1h): ＋ 40℃ ;
- Lowest ambient temperature for trucks intended for use in normal indoor conditions: ＋ 5℃ ; Lowest ambient temperature for trucks intended for use in normal outdoor conditions: － 20℃ ;

Don't use the truck in rainwater.

Don't use the truck in non-position.

NOTE

Special equipment and authorisation are required if the truck is to be constantly used in conditions of extreme temperature or air humidity fluctuations. We recommend with special measures for the truck or buy the truck for cold store. If in doubt, contact the manufacturer's customer service department.

NOTE

Lithium battery charging temperature range: 5~40℃ , 0℃ below the low-temperature environment under the conditions of large-scale charging will cause damage to the battery; Discharge temperature range: -20℃ ~55℃ , low temperature (-20℃ ~0℃) discharge capacity than at room temperature may be reduced compared to normal, it is normal; battery can be 40℃ ~55℃ Ambient temperature, but the battery ambient temperature is too high, especially in the long-term high temperature battery environment, will accelerate the aging of the battery material, shorten the battery life, it is not recommended for long-term use at this temperature. Ambient temperature exceeding the above range of charge and discharge temperature may adversely affect the battery performance or damage, may greatly shorten the battery life, it should be avoided at the above temperature.

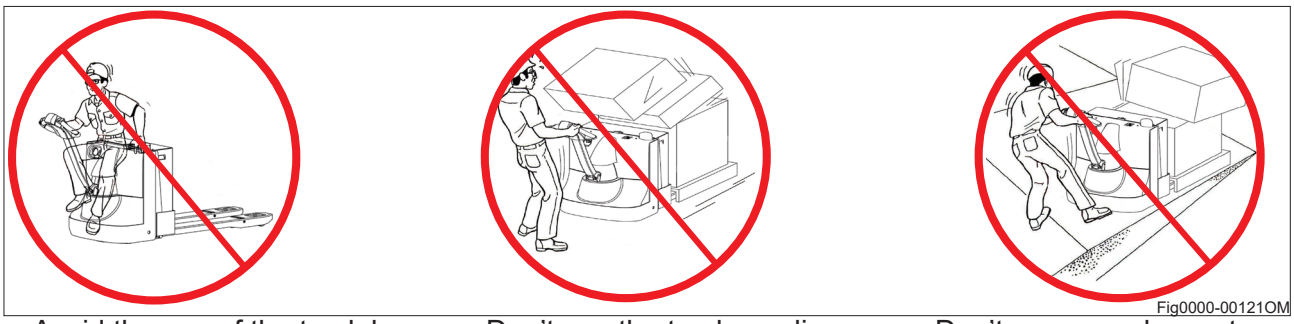

- Avoid the use of the truck by non-working personnel.
- Don’t ride on the truck.
- Don’t carry or lift people by the truck.

Don’t use the truck on slippery road surfaces.
(such as road surfaces with oil stain or residual snow or those frozen ones)

Don’t carry goods on steep slope to prevent goods from sliding off.

i NOTE

Conditions of operation road surface: the truck should run on solid, flat, level and paved road surfaces (including both running and lifting).

Don’t leave the truck before it is parked as regulated.

- Don’t use the truck when any non-working personnel is in the dangerous area.
- Don’t be distracted when using the truck.
- Don’t be distracted when using the truck.

Don’t place any part of your body in any moving part of the truck to avoid being clamped.

➢ Safety Instructions

• Only trained and authorized operator shall be permitted to operate the truck.
• Operator must wear helmet, working shoes and uniform
• Do wash the inner of the truck, do not place the truck outdoors and exposed to the rain.
• Fire extinguisher shall be equipped at the work site. Users can choose truck equipped with fire extinguisher. Driver and manger should be familiar with the fire extinguisher position and application method.
• Whenever you find the forklift abnormal, stop the truck, put on the DANGEROUS or FAULT sign to the truck, remove the key, and report to the managing person. Only after eliminating the fault can you use the truck.

• The controller equips with energy accumulator, do not touch between B+ and B- to avoid electric injury. If you need check or clean the controller, connect load(like contactor coil or horn or bulb or resistance) between controller B+ and B- to discharge the controller capacity.
Only trained and authorized operator shall be permitted to operate the truck.
• Do not use truck under the weather of sand, snow, thunder, storm, typhoon, etc.
Avoid using the truck when the wind speed is larger than 5m/s.
• Cause the wheels of pallet truck is small, it is not allowed to run on the street, and only for driving in specified stacking place.
• When handling bulky loads, which restrict your vision, please operate the machine in reverse or have a guide.
• Do not drive the truck when the forks in high position.
• Goods are not allowed to deviate the fork center, when goods is deviating the fork center, turn or pass uneven road, you are easily to fall. Meanwhile, possibility of turnover will increase.
• Wipe off the oil, grease or water on the soleplate, foot pedal and control lever.

➢ Stability

Stability is guaranteed if your truck is used properly in accordance with its intended purpose. Common reasons for a loss of truck stability include:

• Emergency stops or sharp turns
• Driving with a raised load or a load handling device
• Turning the vehicle around on or driving across a slope
• Driving up or down a slope with the load pointing downhill
• Driving with a wide load
• Carrying a swinging load
• Driving near the edge of a ramp or up steps
• Tilting the mast forward while carrying a raised load
• Driving on uneven surfaces
• Overloading the truck
• Carrying bulky loads in strong winds
• When carrying liquid, its centre of mass inside the container may shift due to inertial force (such as when pulling away, braking or turning)

1.3 Related Safety Instruction and Standard

1.3.1 EN standards

Continuous sound level: 74 dB(A)
according to EN 12053 as stipulated in ISO 4871

The continuous sound level is a value averaged according to standard regulations, taking the sound pressure level into account when driving, lifting and idling. The sound pressure level is measured at the ear.

Electromagnetic compatibility (EMC)

Electromagnetic compatibility (EMC) is a key quality feature of the truck.
EMC involves
● limiting the emission of electromagnetic interference to a level that ensures the trouble free operation of other equipment in the environment.
● ensuring sufficient resistance to external electromagnetic interference so as to guarantee proper operation at the planned usage location under the electromagnetic interference conditions to be expected there .
An EMC test thus firstly measures the electromagnetic interference emitted by the truck and secondly checks it for sufficient resistance to electromagnetic interference with reference to the planned usage location . A number of electrical measures are taken to ensure the electromagnetic compatibility of the truck .

1.3.2 Conditions for application

Working condition requirements:
– Use in specified rated load.
– Used in specified area as factory, tourist attraction and recreation place.
– Used on the flat ground, that is fixed and owns enough carrying capacity.
– It is prohibited to pass the bulge or cavity as the small wheel diameter may cause truck tipping over.
– Used on the road with good vision and equipment use license.
– The truck's maximum operation altitude is up to 2000m.
– Trucks can only be operated in adequately illuminated working areas to avoid injuries. In case of insufficient light, an additional lighting equipment is needed to ensure that the driver can see properly.
If you must travel on an incline, the gradients should be below A% at full load, or below B% without a load.(For the value of A and B, refer to the Gradability in technical data)

B Operation

1.1 Overview, Display, Manipulation

1.1.1 Truck Assemblies

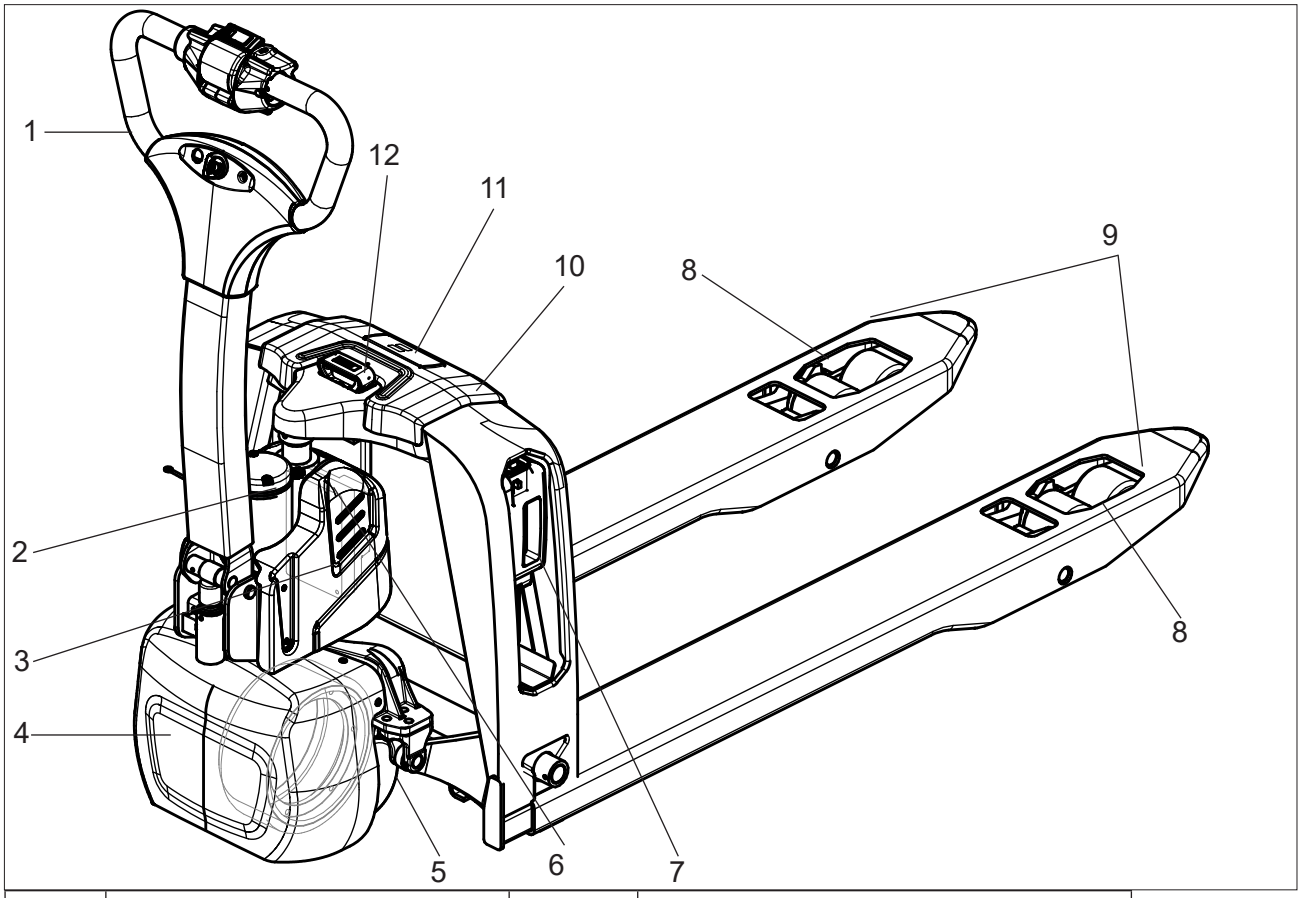

1	Control handle	8	Load wheels
2	Hydraulic unit	9	Forks
3	Hydraulic cover	10	Upper cover
4	Driving hood	11	Display instrument
5	Driving wheel	12	Plug handle
6	Controller		
7	Lithium-ion battery		

1.1.2 Control handle

12	Key switch	Connect and interrupt control current.
13	Fault indicating lamp	Remain red light lit under normal, flashing show the failure state of truck.Shows the error state of the truck(see the chapter D LED Fault Indicator Diagnostics)
14	Creep speed switch	Keeping the handle in the vertical position, simultaneously press creep speed switch and drive switch, the truck will move at a low speed.
15	Lower button (down)	Lowers the load device.
16	Lift button(up)	Raises the load device. When the battery is consumed about 85%, lifting function will be locked.
17	Drive switch	Controls travel direction and speed
18	Horn button	Send out sound warning signals.
19	Emergency reverse switch	By pressing this switch, the vehicle starts to travel in the opposite direction.

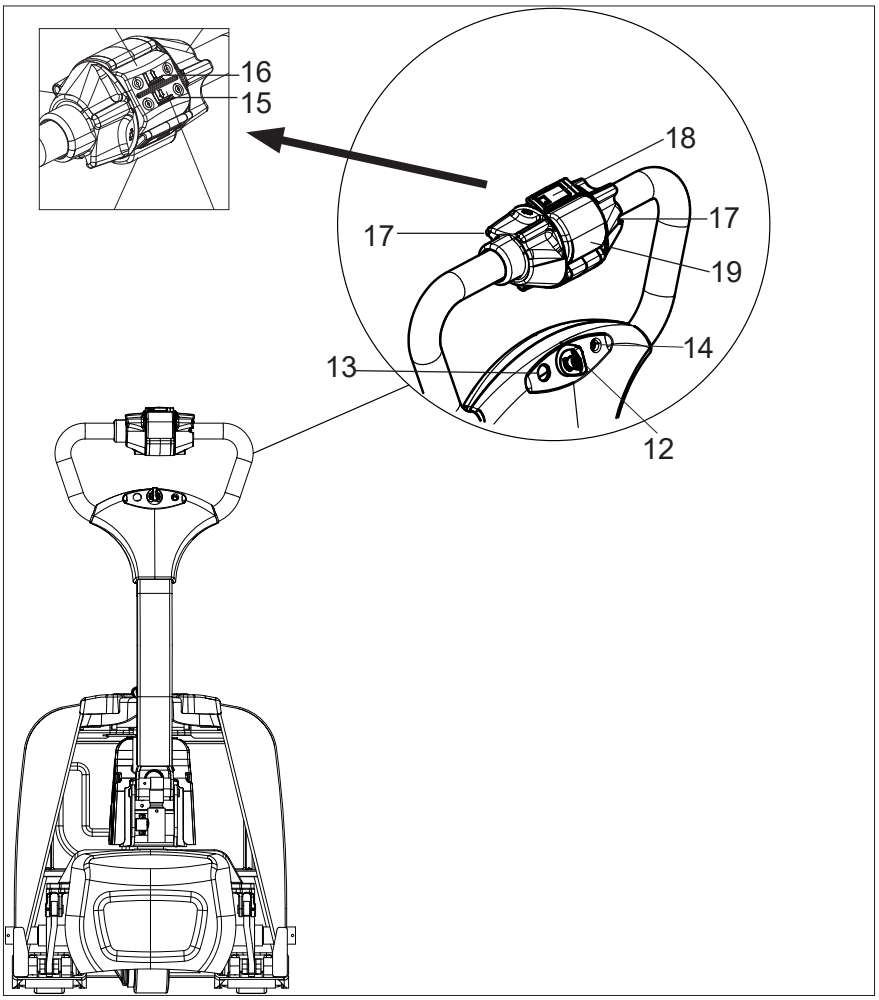

1.1.3 Key switch

Key switch

Connect and interrupt control current.

• When the key rotates to gear “OFF”, the control current of the truck will be interrupted;
• When the key rotates to gear “ON”, the control current of the truck will be connected.

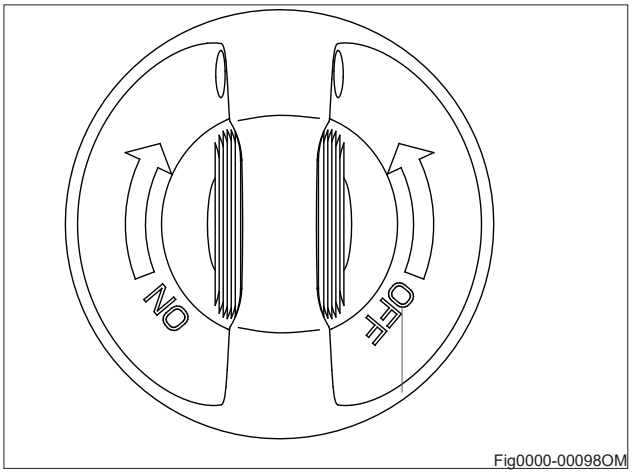

Fig0000-00098OM

NOTE

Pulling out the key switch of a forklift before leaving can prevent the forklift from starting accidentally.

1.1.4 Display instrument

When the truck is started, the four light indicator will light up. When the only residual light indicator (4) is lit, it means that the truck capacity is low and it should be charged immediately.

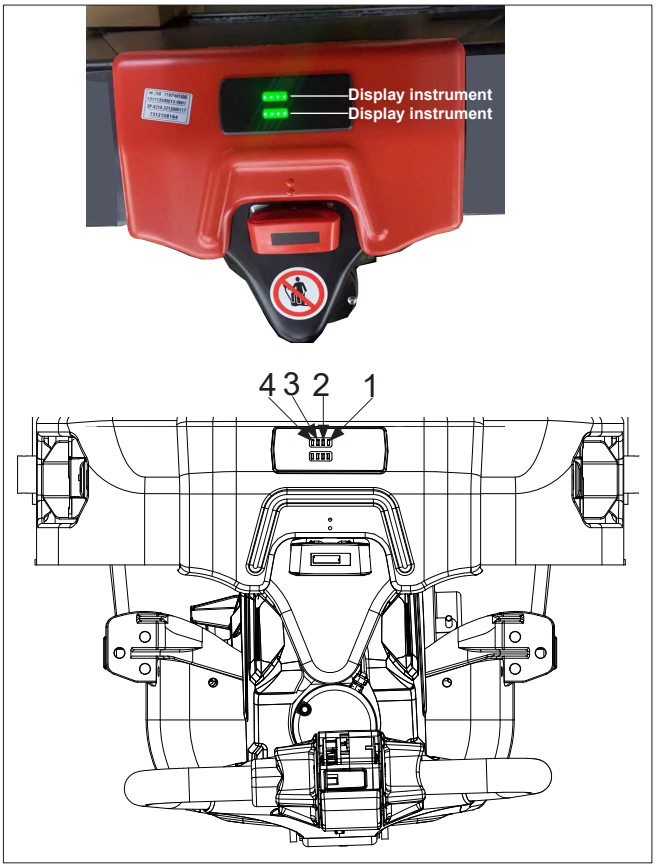

WARNING

When the only residual light indicator (4) is flashing, the truck will be power off.

NOTE

Only in the static state of F4201 can the battery capacity be accurately observed via four indicator lights .

NOTE

It is normal that the light indicator will still be on when the key switch is turned off and the plug handle *is not pulled out.*

NOTE

If the car is out of power, you need to wait for 5-10 minutes until the battery power is restored before moving the truck and charging it immediately.

1.2 Truck use and operation

1.2.1 Preparation for use

WARNING

The following are inspection and preparation operations that must be implemented before the truck is put into daily use.

Table 1. Table of daily inspections by operators

Operator's Daily Checklist

Date _____ Operator _____

Truck No. _____ No. _____

Department _____

Runtime
Meter Reading _____

Daily Check Items	O.K.(√)	Remark
Check for Fluid Leakage		
Check for scratches, deformation or cracks.		
Check Decal Condition		
Check the smooth movement of the wheels.		
Check the function of the emergency brake by activating the plug handle.		
Check the tiller arm-switch braking function		
Check the lifting and lowering functions by operating the buttons.		
Check if all bolts and nuts are tightened firmly.		
Check the vertical creep of the truck.		
Check the lithium-ion installation, making sure not to damage the battery cables.		
Recharge the lithium-ion battery		

Table 1: Table of Daily Inspections by Operators is only a sample table for the daily inspections of operators, and it can be adjusted according to specific requirements.

WARNING

The truck should be regularly maintained by qualified maintenance engineers or technicians that have passed the training of and also been authorized by the manufacturer.

1.2.2 Comissioning

The truck must only be operated on battery current!
To prepare the truck for operation after delivery or transportation, the following operations must be performed:
Check the equipment for completeness.
If necessary, install the battery. Make sure that the battery cable is not damaged.

- Charge the battery.
- Check for Fluid Leakage.
- Check the brake function.
- Check the lifting and lowering function.
- Check the driving function.
- Check the steering function.
- The truck can now be started, see 1.2.3 Truck starting

WARNING

The truck must only be operated with a lithium-ion battery.

NOTE

If the truck is delivered in multiple parts, setup and commissioning must only be performed by trained, authorised personnel.

Wheel flattening

If the truck has been parked for a long period, the wheel surfaces may tend to flatten. This flattening has a negative effect on the safety and stability of the truck.
Once the truck has covered a certain distance, the flattening will disappear.

1.2.3 Truck starting

Carry out check before operation and make sure each function and state is normal(see section 1.3.1 Preparation for use).
Before start, press the horn button (3) and make sure no people around.

1.Engaged the plug handle (1);

2.Open the key switch (2) to start the truck.

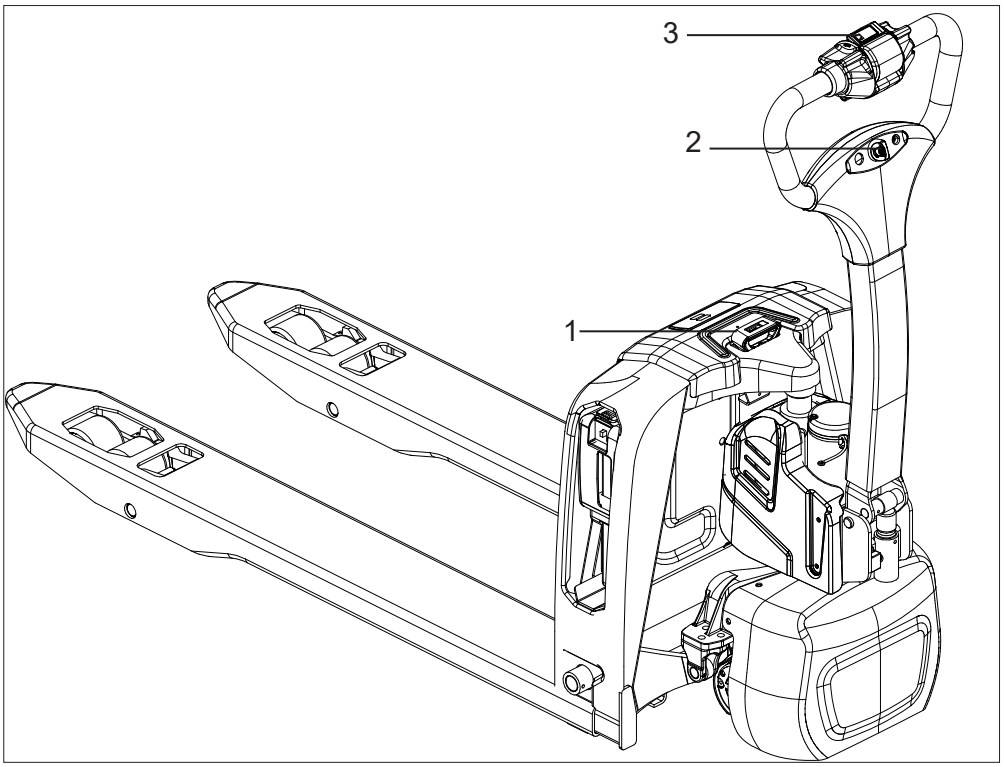

1.2.4 Running, steering and braking

➢ Running

Set the control lever to the running area (M) ,Set the drive switch (1) to the required direction (Forward or Backward). Control the travel speed with the drive switch(1) (the lager the turning angle, the faster corresponding speed)

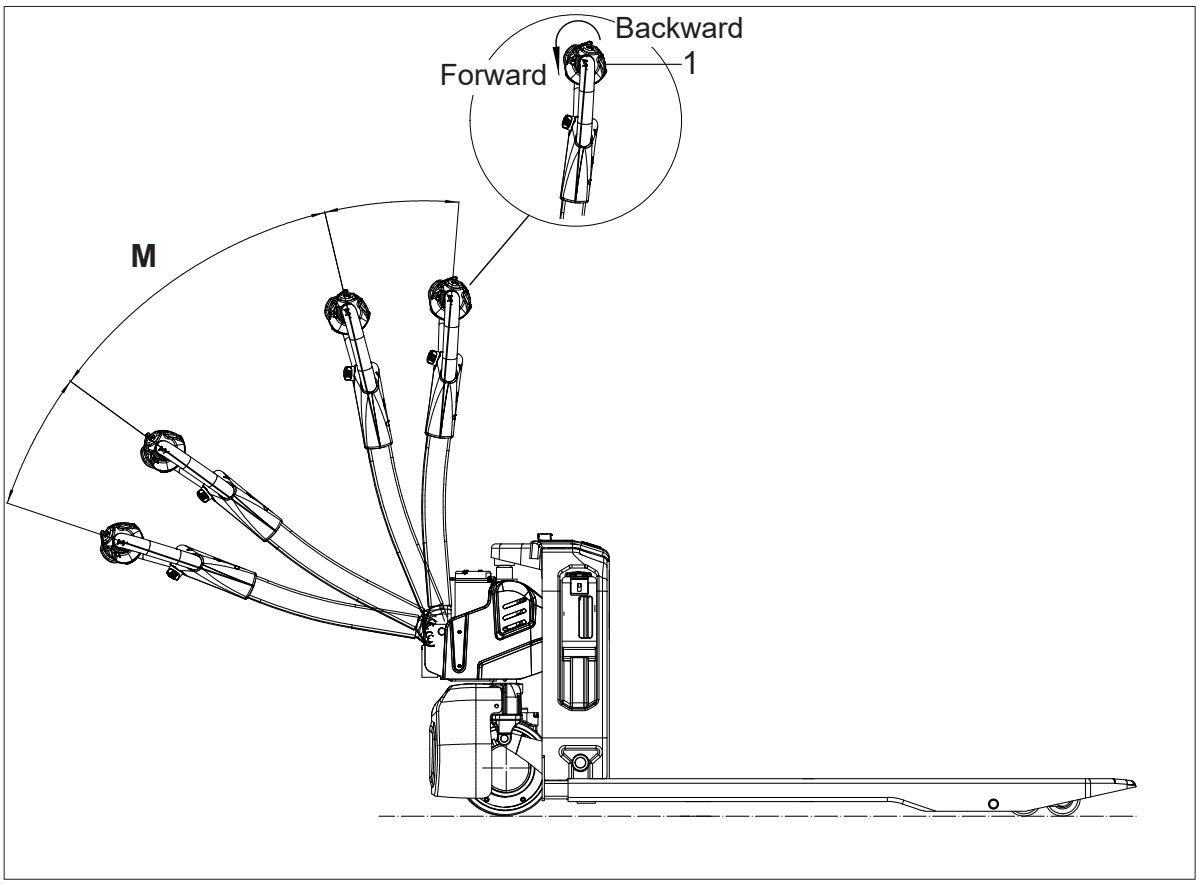

NOTE

When using the truck on a ramp or a uneven road, please lift the forks of the truck to prevent its bottom from colliding with the road surface.

Driver should walk in front of the truck and keep at the side front of the truck when travelling. One hand holds the handle, and operates travel switch with thumb. Always watch moving direction and guide the truck. Or hold the handle with both hands and push the truck go forward.

CAUTION

- Operator must wear protective boots.
- When enter narrow area as lift, first get fork go.
- Travel according to regulated route. Keep road clean and no slipping.

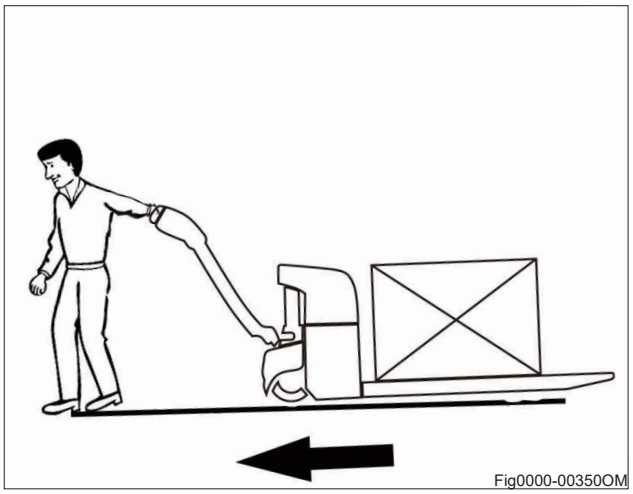
Fig0000-00350OM

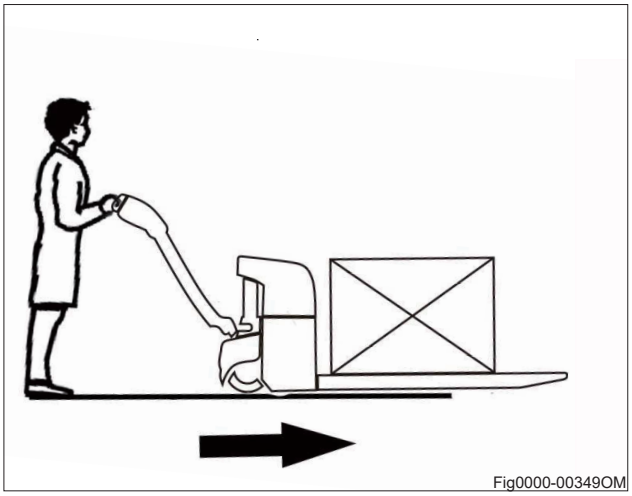
Fig0000-00349OM

Slow travel

When you apply the slow travel speed button and Keep the handle in the vertical position, the truck travels at reduced speed and acceleration.

Procedure:

- Keeping the handle in the vertical position, simultaneously press the slow travel speed button (1) and drive switch (2) .the truck will reduce its speed to 20% of the maximum speed.
- The truck can be operated with a control lever (3) (e.g. in congested areas/travel seat).
- Set the drive switch (2) to the required direction (forward or backward).
- The truck travels at slow speed.

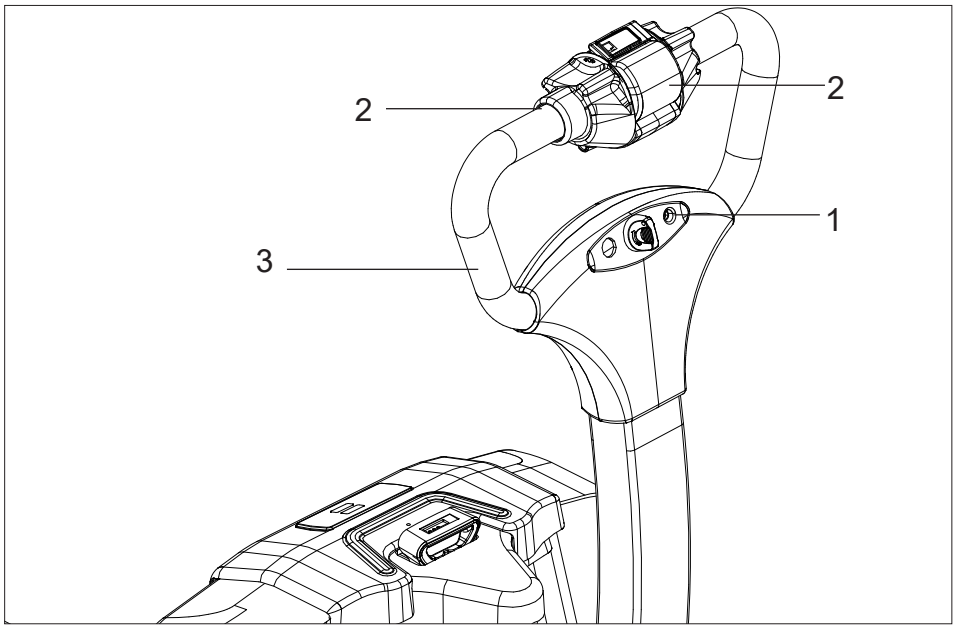

➢ Steering

Move the control hand to the left or right.

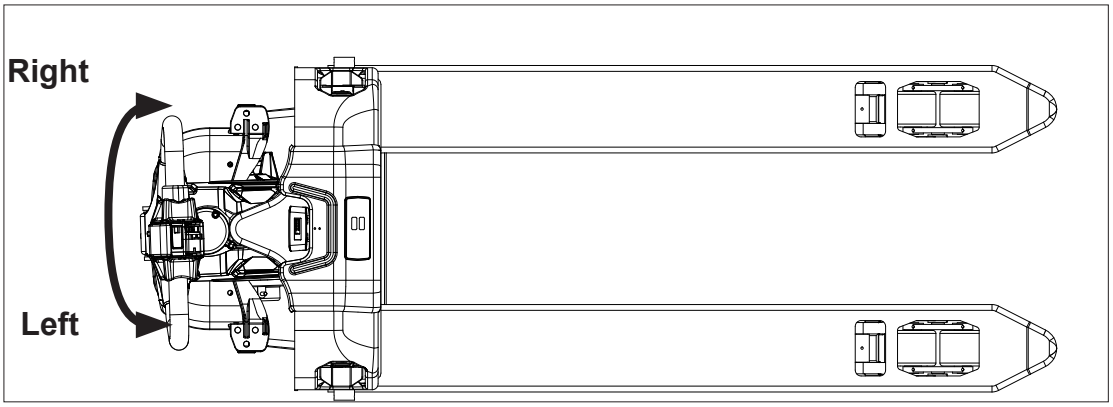

3.Braking

➢ Mechanical operating brake

The truck is braked when the operating handle is released.
The mechanical brake engages when the tiller is positioned in (B） area.

CAUTION

If the control handle moves slowly into the brake position, identify the cause and rectify the fault. If necessary, replace the spring!

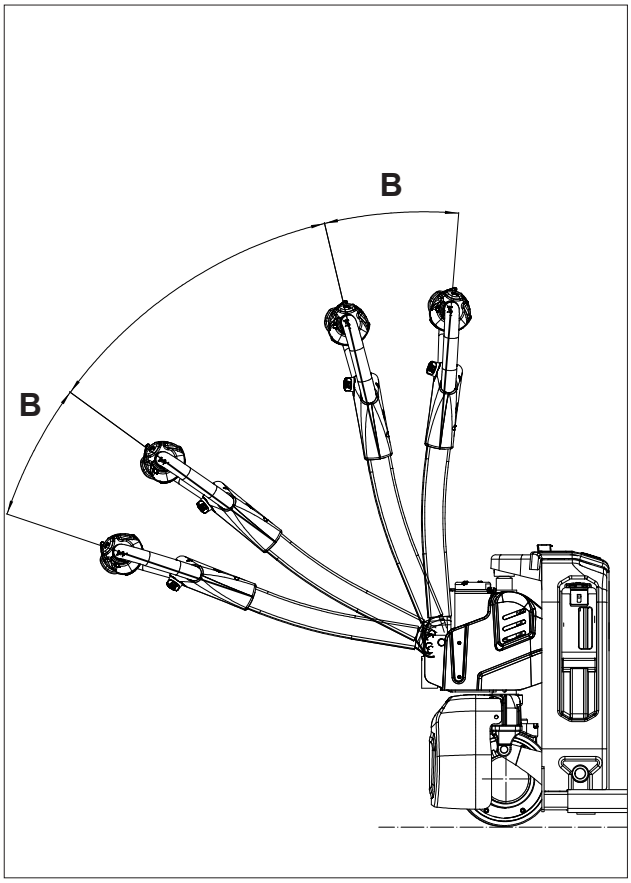

➢ Regenerative braking

Release the drive switch. The drive switch will automatically return to the initial position and the vehicle will begin to enter the regenerative braking state. When it decelerates to <1 km/h, the electromagnetic brake will bring the motor to a stop.

➢ Reverse braking

Braking can be accomplished by changing the direction of travel.
Press the reverse switch in the opposite direction until the truck comes to a stop, then release the drive switch.

CAUTION

Open the drive switch; if the drive switch cannot quickly return to the initial position or resets very slowly, identify the cause and rectify the fault.

➢ **Parking brake**

The mechanical brake applies automatically when the truck comes to rest.

➢ **Supply plug**

Pull out the plug handle, and then all the electrically propelled functions will be interrupted.

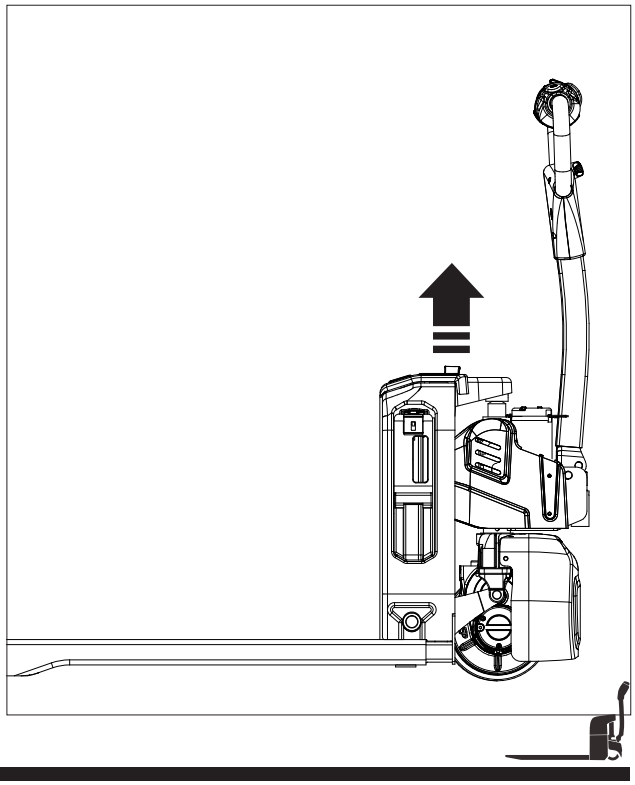

1.2.5 Goods picking

Keep pressing the lifting button until reaching the required lifting height.

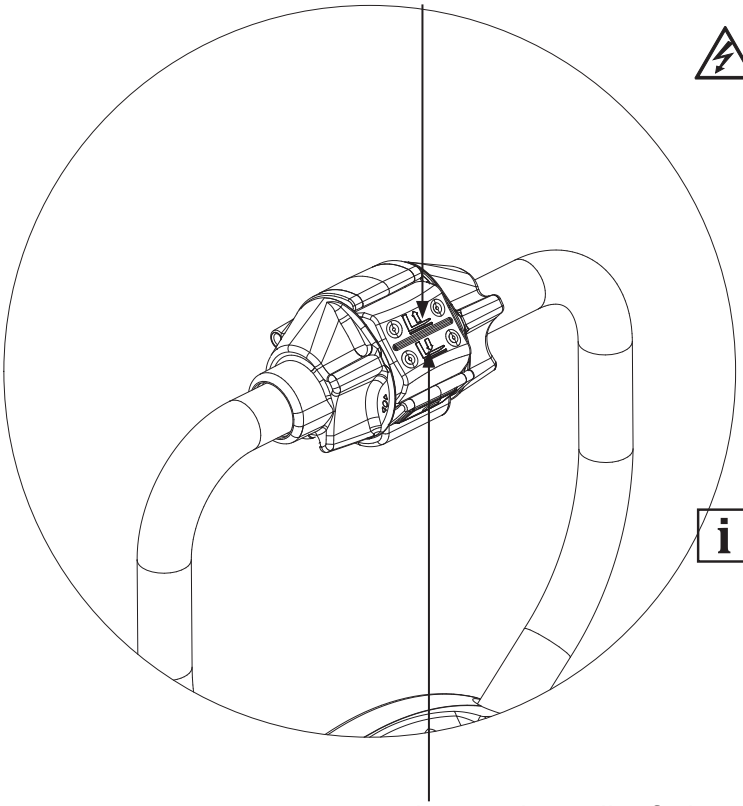

WARNING

Goods failing to be arranged and fixed may result in accidents.

NOTE

To avoid shortening the service life of the oil cylinder, try not to lift the forks to the highest state for lifting.

Lower the pallet forks to the bottom through pressing the lowering button.

Fig1154-00012OM

1.2.6 Parking the truck securely

1.Drive the truck to safe area or appointed area.

2.Lower the forks to the bottom;

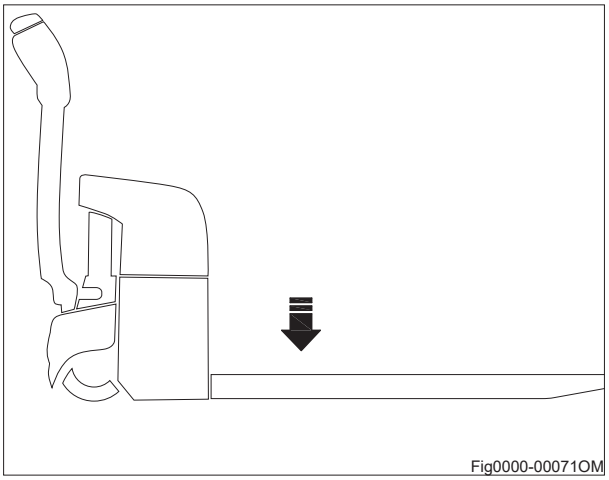
Fig0000-00071OM

3.Turn off the key switch(1) ;

4.Pull out the plug handle (2) ;

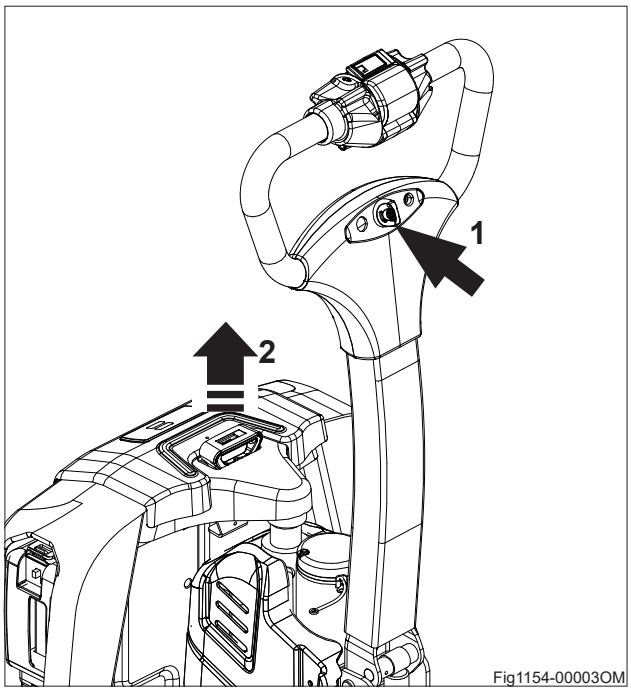

Fig1154-00003OM

WARNING

- Should it be necessary for operators to leave the truck, even for just a moment, the truck should also be well parked as specified.
- The trucks are not allowed to park on the slopes.
- The forks must be lowered to the bottom.

1.2.7 Drive directions

The drive directions of the truck are forward (1) and reverse (2).

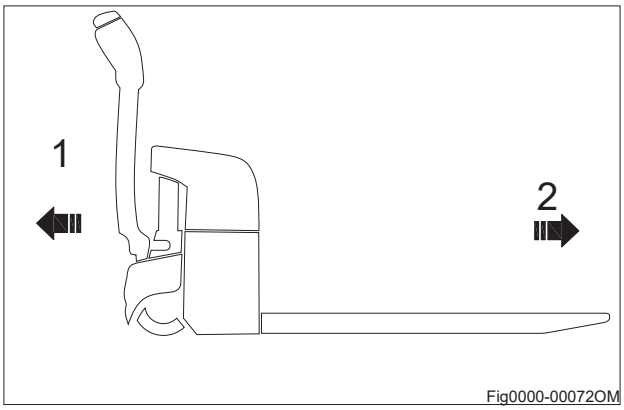

Fig0000-00072OM

1.2.8 Loading

•Approach the load carefully.
•Adjust the height of the forks until they can be easily inserted into the pallet.
•Insert the forks under the load.
•If the load is shorter than the forks, position the forks so that the front of the load overhangs them by a few centimeters, to avoid interference with the load immediately ahead.
•Raise the load a few centimeters above its support.
•Back the truck away from the stack or any neighboring loads, gently and in a straight line.

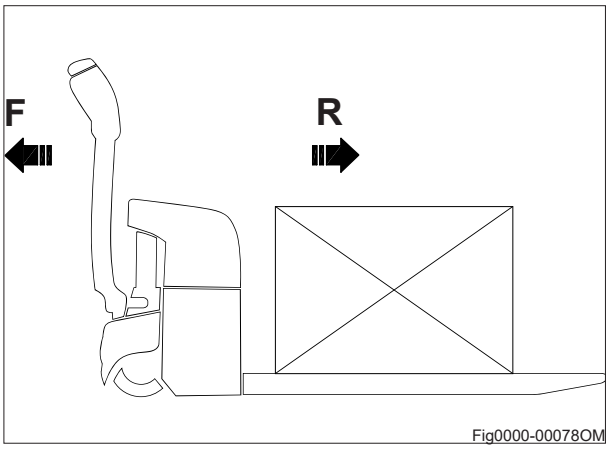

Fig0000-00078OM

➢ Transporting loads

Always carry loads in the forward direction of travel (R) in order to have the best visibility.

When carrying a load on a slope, always ascend or descend with the load uphill. Never drive sideways across a slope or perform a U-turn.

Reverse travel (F) is to be used solely for unloading. Since visibility is reduced when travelling in this direction, drive only at very slow speed.

➢ Unloading

Carefully drive the truck to the desired location.
Carefully drive the truck to the unloading area.
Lower the load until the fork arms are free from the pallet.
Back the truck away in a straight line.
Raise the forks to proper height.

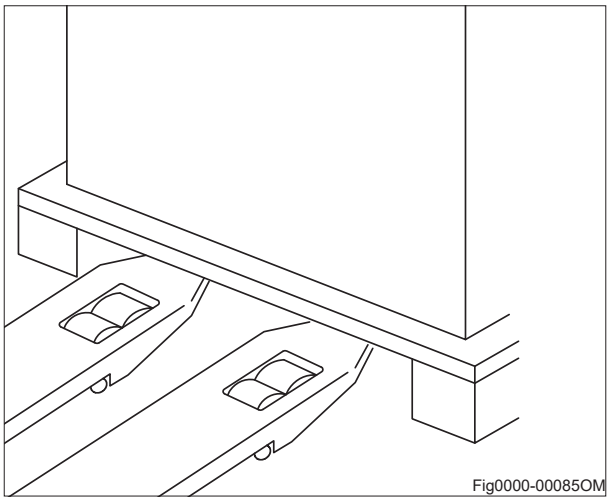
Fig0000-00085OM

CAUTION

If the field of vision is poor, ask a guide for assistance.

1.2.9 Using the truck on a slope

NOTE

Incorrect use of the truck on slopes places stress on the traction motor, brakes and battery.

Be particularly careful near slopes: Never attempt a slope with a gradient greater than that specified in the truck's data sheet. Make sure that the ground is dry with a non-slip surface and that the route is clear.

➢ Ascending slopes

Always ascend slopes travelling in the reverse direction, with the load facing uphill. Without a load, it is recommend to ascend slopes forwards.

➢ Descending slopes

Travel down slopes must always be forwards, with the load uphill. Without a load, it is recommended to descend slopes forwards. In all cases, travel at a very low speed and brake very gradually.

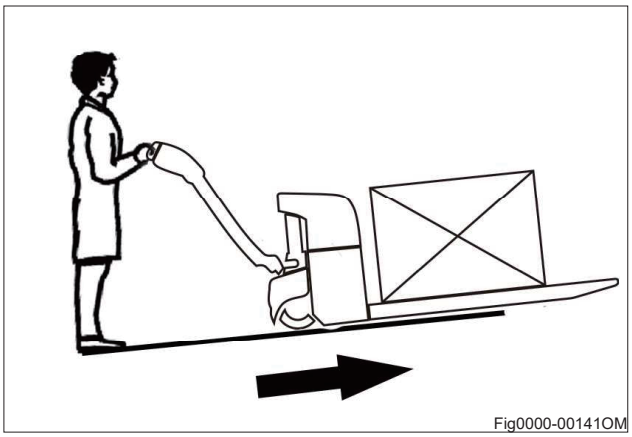
Fig0000-00141OM

DANGER

Risk to life and/or risk of major equipment damage.
Never park the truck on a slope.
Never make a U-turn or take shortcuts on a slope. On a slope, the operator must drive very slowly.

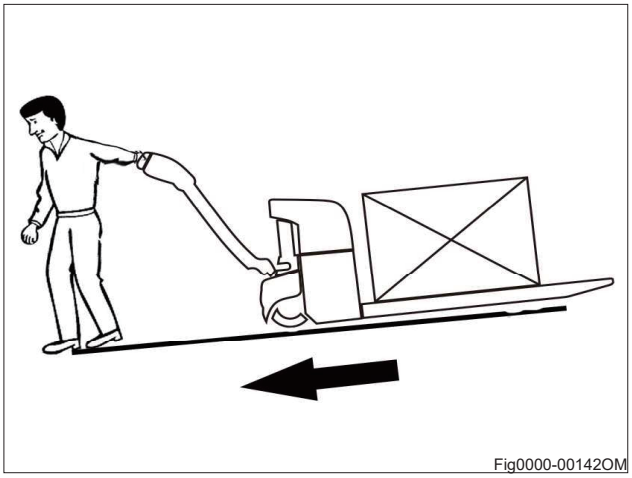
Fig0000-00142OM

➢ Starting on a slope

If you have to stop and then start on slope, proceed as follows:

- Stop on the slope by pressing the accelerator in the opposite direction until the machine comes to a standstill.
- Return the accelerator to the neutral position, then release the accelerator control button to apply the parking brake.
- To restart, press the accelerator button for the desired direction.
- The truck will move.

NOTE

Incorrect use of the truck on slopes places stress on the traction motor, brakes and battery.

1.2.10 Truck transport

Correctly fix the truck to avoid move when using truck or trailer.
Procedure:

- Park the truck securely.
- Sling the tensioning belt (1) around the truck and attach it to the fastening rings of the transporting vehicle.
- Use wedges to prevent the truck from moving.
- Tighten the tensioning belt (1) with the tensioner.

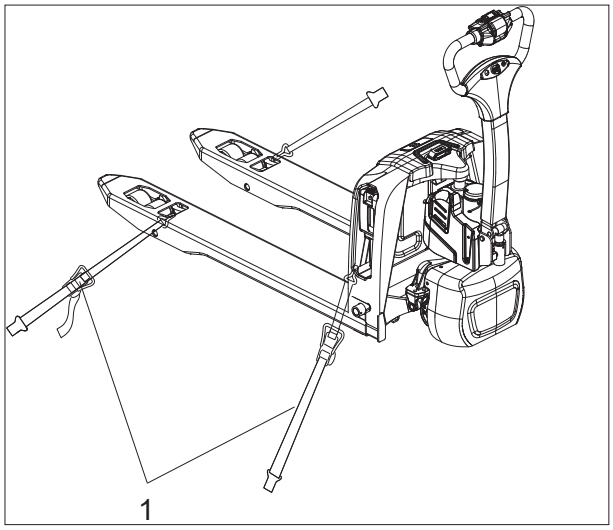

WARNING

- *The truck or trailer must have fastening rings.*
- *Use wedges to prevent the truck.*
- *Only use tension belt or fastening belt of good nominal strength.*

The pallet truck is designed for short-distance material handling only and is inappropriate for long-distance transportation. If needed, the truck must be transported by using lifting device or platform to place it on truck or trailer. Before operation, fix the pallet truck firmly on the transport vehicle with belt, and block the wheel to avoid relative motion during transportation.

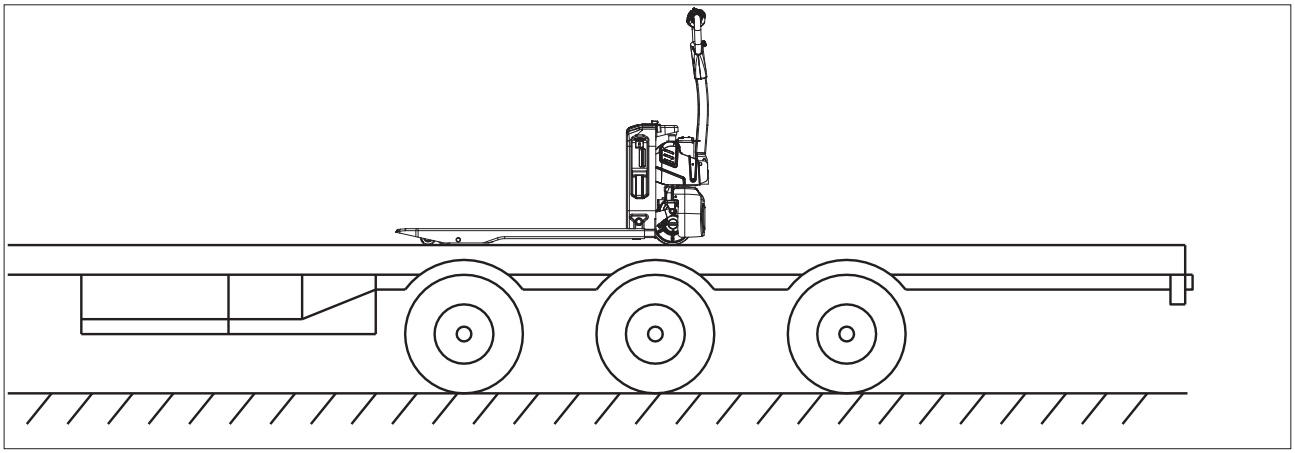

1.2.11 How to remove a broken truck

It's not allowed to tow the forklift truck on the ground directly when the truck is broken down or damaged since the brake of the truck is closed under normal circumstances. Appropriate vehicles should be used to remove the broken trucks.

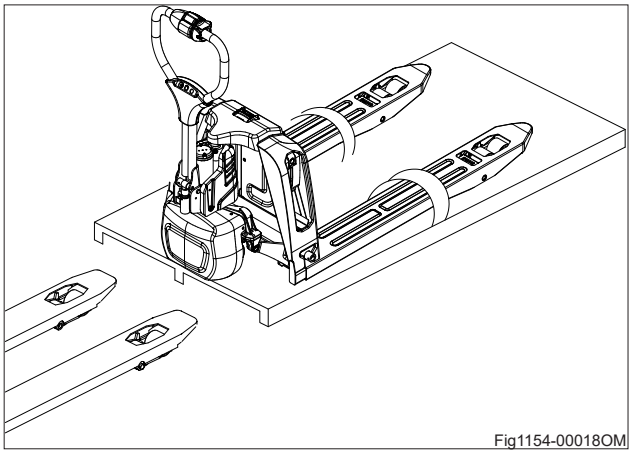
Fig1154-00018OM

NOTE

Only use haulage equipment with sufficient load capacity.

•The load weight includes the net weight of the truck(including battery weight) and the wooden pallet.

•The pallet or wooden box should be large and strong enough to withstand the weightof the truck.

•Pay attention to the fork blades when lifting the truck onto the pallet, to prevent injuries caused by the forks.

Follow the prescribed steps and park the vehicle correctly.

Make sure the forks are aligned with the pallet, move slowly and stop after inserting the forks as far into the pallet as possible.

CAUTION

Operate on open, level ground and pay attention to ground conditions when lifting and lowering the pallet to prevent the truck from tipping.
When transporting the truck, make sure it is fully secured and take precautionary measures against bad weather.

1.2.12 Operating the truck without its own drive system

If the truck has to be moved after a failure has rendered it immobile, proceed as follows:

- Set the emergency stop switch “OFF”.
- Set the key switch “OFF” and remove the key.
- Prevent the truck from rolling away.
- Remove the cover.
- Screw in two screws(1), M4*30mm)until the truck can be moved (no braking action).
- Set the emergency stop switch “ON”.
- Set the key switch “ON”, which the truck powered all the time.

After setting down the truck at the destination, unscrew two screws(1).

Braking action is restored.

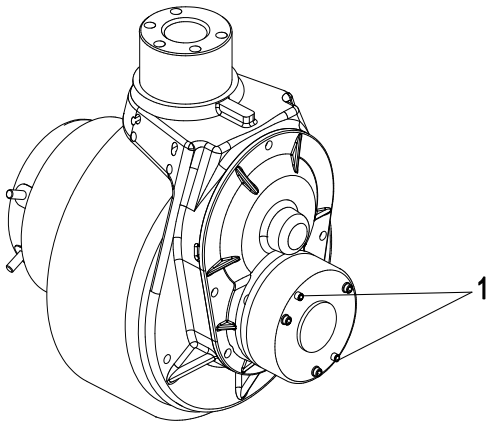

NOTE

Inoperative trucks movement after brake release must ensure that the power of the truck is on or risk damaging the truck controller.

WARNING

This operating mode is not permitted when negotiating inclines and gradients.

C

Battery use and maintenance

1.1 Battery charging

1.1.1 Precautions

- Avoid the existence of any metal object in the surface of the lithium-ion battery;
- Do not pierce the battery case with nails or other sharp objects.
- Do not short-circuit the battery with wires or other metal objects!
- The plug connection parts should be inspected in terms of obvious damages before charging;
- Fire-fighting equipment must be kept in the charging place;
- Before charging, check if there is damage on cable connection and plug connection pieces.
- Do not use irregular charging sockets;
- The net height of the charging area shall be higher than 5m, and the safe distance from other areas shall be greater than 5m. Charging in non-charging area is prohibited;
- No inflammable substances or spark-generating materials being present or stored within a distance of 2 metres of the truck parked for battery charging.
- No smoking or open fire around when charging.
- When charging, do not wrongly connect the battery polarity, otherwise it may damage the battery.
- Please charge the lithium-ion battery at an ambient temperature of 0℃ to 40℃ .Do not charge the lithium battery below 0℃ .
- The safety provisions related to the lithium-ion battery and the manufacturer of charging station must be strictly abode by.

1.1.2 Charging the battery with external charger

Charging Procedure:

- Park the truck securely;
- Pull up the plug handle and remove the lithium-ion battery according to section 1.2 Battery removal and installation;
- Visual Inspection the external charger;
- If undamaged, Insert the charger charging plug into the battery plug;
- Insert the charger power plug into a suitable power outlet.

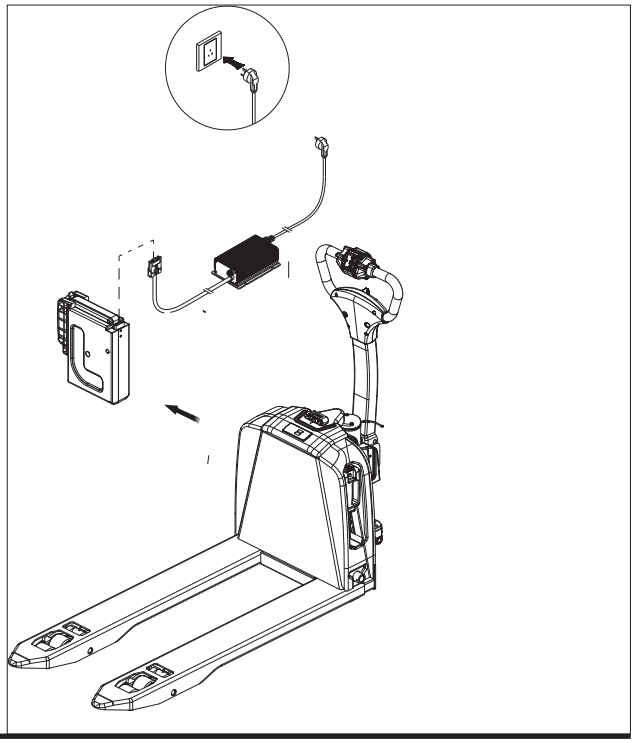

NOTE

The charge indicator lights up, the battery is charging.
LED charging indicator: Red charging
LED charging indicator: Green charged

WARNING

Charger 24V/5A maximum input power 166W .
Please strictly implement the above data to prevent equipment damage and accidental risks such as fire.

WARNING

Store the charger in a clean, and dry environment after charging. Do not place the charger in the frame to prevent damage to the charger after outdoor rain, and cause dangerous accidents such as short circuit or fire in the charging process.

WARNING

Damage to battery and charger!
The charger must be matched to the battery in terms of voltage and charging capacity!
Observe the correct combination of battery and charger to avoid overheating and fire hazard.
Only use the charger that is suitable for the corresponding battery.

The battery is fully charged after
4.0 hours of charging at 100 ~ 240V AC;

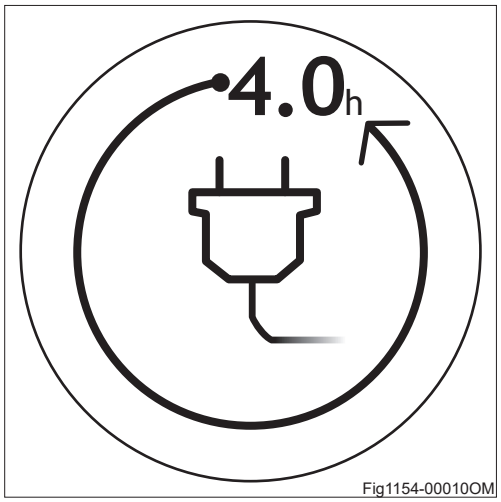

Fig1154-00010OM

The battery can be operated continuously for 3.0 hours in a fully charged state.

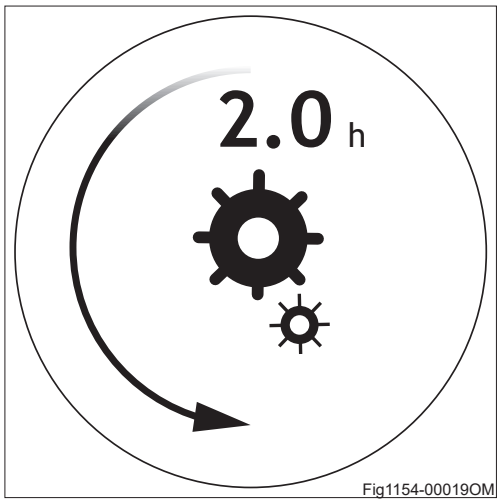

Fig1154-00019OM

1.1.3 Battery type & dimensions&Charging time

Battery types & dimensions are as follows:

Tuck type	Voltage/ Rated capacity	Dimensions	Charger	Charging time
F4201	48V/20Ah	290*238*76	5A	4h

1.2 Battery removal and installation

Park the truck securely as described chapter B section 1.2.6 before removal and installation of the battery.

Battery removal and installation steps:

- Open the cover (1) and disconnect the left and right battery plug ;
- Hold the battery handle and pull out the lithium-ion battery from two side;

WARNING

Before removing the battery, make sure the vehicle is completely powered off.

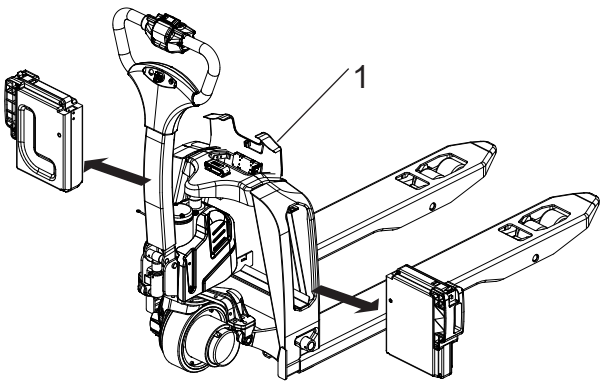

D Maintenance

1.1 Truck maintenance

Only through regularly implementing truck maintenance work can the sustainable and reliable use of the forklift be ensured.
Only those receiving professional training and approved as qualified can be competent in various equipment care maintenance operations. If you intend to independently implement maintenance, you are recommended to have your maintenance personnel receive on-site training from the service representative of the equipment supplier.

➢ Safety announcement:

• Tyre replacement: please implement tire replacement using the tires designated by the manufacturer, as unqualified tires may influence the properties and stability of the products.
• It is improper to clean the truck using inflammable liquid.
• Ensure that the power supply has been completely disconnected before actual maintenance operation.

➢ Decommissioning the industrial truck:

• If required to be parked for over one month, the truck must be placed in a dry and frost-free environment.
• Clean the truck carefully.
• Coat any unpainted metal parts with a thin layer of oil or grease.
• In case that the truck is out of use for a long time, the storage battery should better be taken out.
• Recharge the lithium-ion battery every 2 months. Please observe the above instructions.
• Raise and chock the truck: the wheels must not touch the ground in order to prevent irreversible deformation of the tyres.

WARNING

Discharge can damage the battery

If the battery is not used for a long period of time, it can become damaged through discharge.
•Before a long period of inactivity, the battery must be fully charged.
•To ensure a long battery life, we recommend charging the battery every 2 months when it is not being used.

➢ Restoring the truck to operation

•Thoroughly clean the truck.
•Clean the battery. Grease the pole screws using pole grease and reconnect the battery.
•Recharge the battery.
•Check if the hydraulic oil contains condensed water and change if necessary.
•Follow the daily checklist.

➢ Safety tests to be performed at intervals and after unusual incidents

The truck must be inspected at least annually (refer to national regulations) or after any unusual event by a qualified inspector. The manufacturer offers a safety inspection service which is performed by personnel specifically trained for this purpose.
A complete test must be carried out on the technical condition of the truck with regard to safety. The truck must also be examined thoroughly for damage.
The operating company is responsible for ensuring that faults are rectified immediately.

➢ Spare parts:

Only original spare parts have been certified by our quality assurance department. To ensure safe and reliable operation of the Pallet truck, use only the manufacturer's spare parts. Used parts, oils and fuels must be disposed of in accordance with the relevant environmental protection regulations. For oil changes, contact the manufacturer’s specialist department.

➢ Tyre replacement

Any repairs or maintenance to the truck must be performed only by trained and authorized technicians. Remove and install the tyres see the service manual.

➢ Troubleshooting

If the fault cannot be rectified after carrying out the remedial procedure, notify the Manfacture's sevice department, as any further troubleshooting can only be performed by specially trained and qualified service personnel.

Fault	Probable Cause	Action
Truck does not start.	–Battery connector not plugged in. –Key switch in “0” position. –Incorrect CanCode code. –Battery charge too low. –Faulty fuse. –Truck in charge mode.	–Check the battery connector and connect if necessary. –Set key switch to “I”. –Check code. –Check battery charge, charge battery if necessary. –Check fuses. –Interrupt charging.
Load cannot be lifted	–Charging capacity below 15％ . –Truck not operational. –Hydraulic oil level too low. –Faulty fuse.	–Charging the battery. –Carry out all measures listed under. “Truck does not start”. –Check the hydraulic oil level. –Check fuses.

➢ LED Fault Indicator Diagnostics

Error Message

LED BLINKS	Fault Name	Fault Reason	How To Do
（1,2）□ □	SEVERE UNDERVOLTAGE/ UNDERVOLTAGE CUTBACK	Capacitor bank voltage dropped below the Severe Undervoltage limit;Capacitor bank voltage dropped below the Undervoltage limit with the FET bridge enabled	Check one by one according to the cause of the fault
（1,3）□ □□□	SEVERE OVERVOLTAGE/ OVERVOLTAGE CUTBACK	Capacitor bank voltage exceeded the Severe Overvoltage limit;Capacitor bank voltage exceeded the Overvoltage limit with the FET bridge enabled	Check one by one according to the cause of the fault
（1,4）□ □□□□	CONTROLLER OVERTEMP	Heatsink temperature over +75C;	Check one by one according to the cause of the fault
（1,5）□ □□□□□	"MOTOR TEMP SENSOR/HOT CUTBACK"	Motor thermistor input is at the voltage rail(0 or 10V);Motor temperature is at or above the Temperature Hot parameter setting	Check one by one according to the cause of the fault
（1,6）□ □□□□□□	CONTROL LOWTEMP	Heatsink temperature below -40C;	Check one by one according to the cause of the fault
（2,1）□□ □	THROTTLE/HPD SEQUENCING	"Throttle input is out of range;HPD(High Pedal Disable) or sequencing fault caused by incorrect sequence of KSI, interlock, direction and throttle inputs"	Check one by one according to the cause of the fault

LED BLINKS	Fault Name	Fault Reason	How To Do
（2,2） □□ □□	MAIN CONTACTOR OR MAIN DRIVER FAULT/PRECHARGE FAILED	"Just prior to the main contactor closing, the capacitor bank voltage (B+ connection terminal) was loaded for a short time and the voltage did not discharge;With the main contactor commanded closed, the capacitor bank voltage (B+ connection terminal) did not charge to B+;Main Contactor driver is either open or shorted;Controller failed to precharge"	Check one by one according to the cause of the fault
（2,3） □ □□	ENCODER/STALL DETECTED	Motor encoder phase failure detected;No motor encoder movement detected	Check one by one according to the cause of the fault
（2,4） □ □□□□	MOTOR OPEN	Motor phase U,V or W detected open	Check one by one according to the cause of the fault
（2,5） □ □□□□□	EMBRAKE DRIVER FAULT	Electromagnetic brake driver is either short	Check one by one according to the cause of the fault
（2,6） □□ □□	HANDLE FAULT1	NONE	Check one by one according to the cause of the fault
（3,1） □□ □□□	"EMBRAKE FAILED TO SET"	Electromagnetic brake driver is either open	Check one by one according to the cause of the fault
（3,2） □□ □□□	EMER REV HPD/EMR SRO	"At the conclusion of emergency Reverse, the fault was set because various inputs were not returned to nutral;The EMR switches are turned on before KSI"	Check one by one according to the cause of the fault
33	PUMP DRIVER FAULT	Pump driver is either short	Check one by one according to the cause of the fault
34	PUMP SRO	The lift switch is turned on before KSI	Check one by one according to the cause of the fault
35	VALVE DRIVER FAULT	Valve driver is either open or shorted	Check one by one according to the cause of the fault
36	VALVE SRO	The lower valve input switches are turned on before KSI	Check one by one according to the cause of the fault
37	HYDRAULIC SWITCH	NONE	NONE

LED BLINKS	Fault Name	Fault Reason	How To Do
38	**RELAY FAILURE**	**NONE**	**NONE**
41	"FIVE or FIFTEEN V SUPPLY FAILURE/ EXTERNAL SUPPLY OUT OF RANGE"	"The voltage of internal +5V supply is upper or lower than the threshold voltage. The Torrance is -/+10%;The voltage of internal +15V supply is upper or lower than the threshold voltage. The Torrance is -/+10%;The voltage of external +5V or +14V is either greater than the upper voltage threshold or lower than the lower voltage threshold.The Torrance is -/+10%"	Check one by one according to the cause of the fault
42	CAN BUS LOADING/ PDO TIMEOUT or MAPPING ERROR	Can communication equipment problem or can harness problem	Check one by one according to the cause of the fault
43	HW FAILSAVE	The hardware is defeated	Check one by one according to the cause of the fault
44	SW FAULT	The CRC code of the application is not right	Check one by one according to the cause of the fault
45	INTERLOCK_SRO	NONE	NONE
46	BATT_CNNCT_ERR	NONE	NONE
53	PUMP DRIVER OPEN	Electromagnetic brake driver is either open	Check one by one according to the cause of the fault
81	PARAMETER MISMATCH or CHANGE	Program parameter mismatch or parameter change	Check one by one according to the cause of the fault
83	NV FAILURE	"Controller operating system tried to write to EEPROM memory and failed"	Check one by one according to the cause of the fault
84	SUPERVISION	Mismatched redundant readings; damaged Supervisor	Check one by one according to the cause of the fault
87	TILLER HANDSHAKE FAULT	Can handle not connected or can handle communication failure	Check one by one according to the cause of the fault

LED BLINKS	Fault Name	Fault Reason	How To Do
88	GUAGE HADNSHAKE FAULT	Guage not connected or Guage communication failure	Check one by one according to the cause of the fault
99	PROGRAM CHECK ERROR	Program check error	NONE

NOTE

*LED ON: When there is no failure, the LED indicator is on.
*LED OFF: The controller is not powered on.

1.2 Maintenance table

50-hour/7-Day maintenance	
1	Check the functions of the operation switches and display.
2	Check display equipment, alarm system and safety devices.
3	Check the emergency reverse switch, reverse braking, emergency disconnect switch and regenerative braking.
4	Check tiller steering functions.
5	Check the drive wheel and load wheel for worn or damage.
6	Check for brake condition when the control handle on horizontal position and vertical position.
250-hour/2-month maintenance	
After operating for 250 hours in total, the truck should also be maintained according to the following procedures in addition to the 50-hour maintenance mentioned above	
7	Inspect where there is any damage in the cables and whether the terminals are reliable.
8	Inspect whether there is any screw losing or slipping out.
9	Inspect whether there is any abrasion or damage in the oil pipes.
10	Inspect where is any leakage in the hydraulic oil.
11	Clean and lubricate the contact surface with grease.
500-hour/3-month maintenance	
After operating for 500 hours in total, the truck should also be maintained according to the following procedures in addition to the 250-hour maintenance and 50-hour maintenance mentioned above	
12L	Check that the battery cable connections are tight and grease the battery poles if necessary.
13	Check if the signs are legible and complete
14	Inspect and fasten the controller and other electrical apparatus elements
15	Check for oil leakage.
16	Check for oil level, change oil
17	Check if the clearance is proper and adjust, if necessary
1000-hour/6-month maintenance	
After operating for 1000 hours in total, the truck should also be maintained according to the following procedures in addition to the 50-hour maintenance,250-hour maintenance and 500-hour maintenance mentioned above	
18	Inspect whether there is any abnormal sound or disclosure of the gear box.
19	Inspect the abrasion situations of the driving wheel/bearing wheel and please timely replace seriously abraded ones.
20	Inspect whether all the oil pipes, pipelines and joints are reliably connected and whether all the sealing elements are reliable.
21	Clean foreign matter
22	Check the frame for damage.
23	Inspect where there is any damage in the oil cylinders and whether corresponding installations are reliable
24	Inspect and check the hydraulic filter,replaced if necessary.
25	Check cylinder block and piston for damage and ensure that they are properly sealed and secured.

26	Inspect whether the bearing capacity reaches the rated load and implement corresponding adjustment through the flood valve adopted in the hydraulic station
27	Inspect whether all the labels are clear and intact
28	Check if there is abrasion between shaft and bearing of front and rear fork.
29	Check if there is deformation or Check if there is deformation or fracture on the upper and down connecting rod.
30	Check for looseness of each joint.
31	Add lubricating grease to the pin roll.
2000-hour/12-month maintenance	
After operating for 2000 hours in total, the truck should also be maintained according to the following procedures in addition to the 50-hour maintenance, 250-hour maintenance, 500-hour maintenance and 1000-hour maintenance mentioned above	
32	Check hydraulic oil level.
33	Replace hydraulic oil.

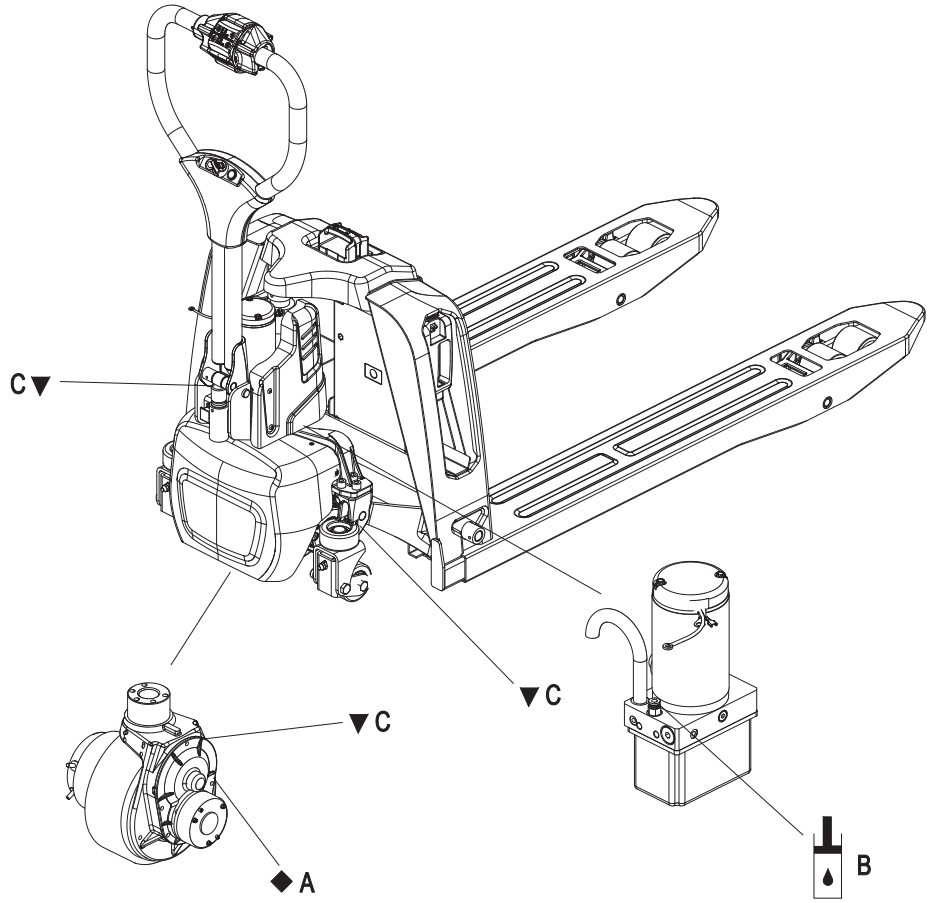

▼ Contact surface

Hydraulic oil injection nozzle

◆Grease

Fig1154-00023OM

Table 1 Lubricants				
Code	**Type**	**Specification**	**Amount**	**Position**
A	Grease 3#(MoS_2)	-	110 grams	Gearbox
B	Anti-wear hydraulic oil	L-HM32	280ml	Hydraulic System
C	Multi-purpose grease	Polylub GA352P	Appropriate amount	Contact Surface

NOTE

Add hydraulic oil till you can't hear explosion sound during lifting any more.

1.3 Maintenance Instructions

1.3.1 Prepare the truck for maintenance and repairs

All necessary safety measures must be taken to avoid accidents when carrying out maintenance and repairs. The following preparations must be made:

- Park the truck securely (See chapter B section 1.2.6).
- Remove the key to prevent the truck from accidentally starting.
- When working under a raised lift truck, secure it to prevent it from tipping or sliding away.

1.3.2 Remove the cover

- Unscrew four screws (1), remove driving cover (2);
- Turn the control handle 90 degrees, unscrew hydraulic cover (4) of the four screws (5) via the spaces.

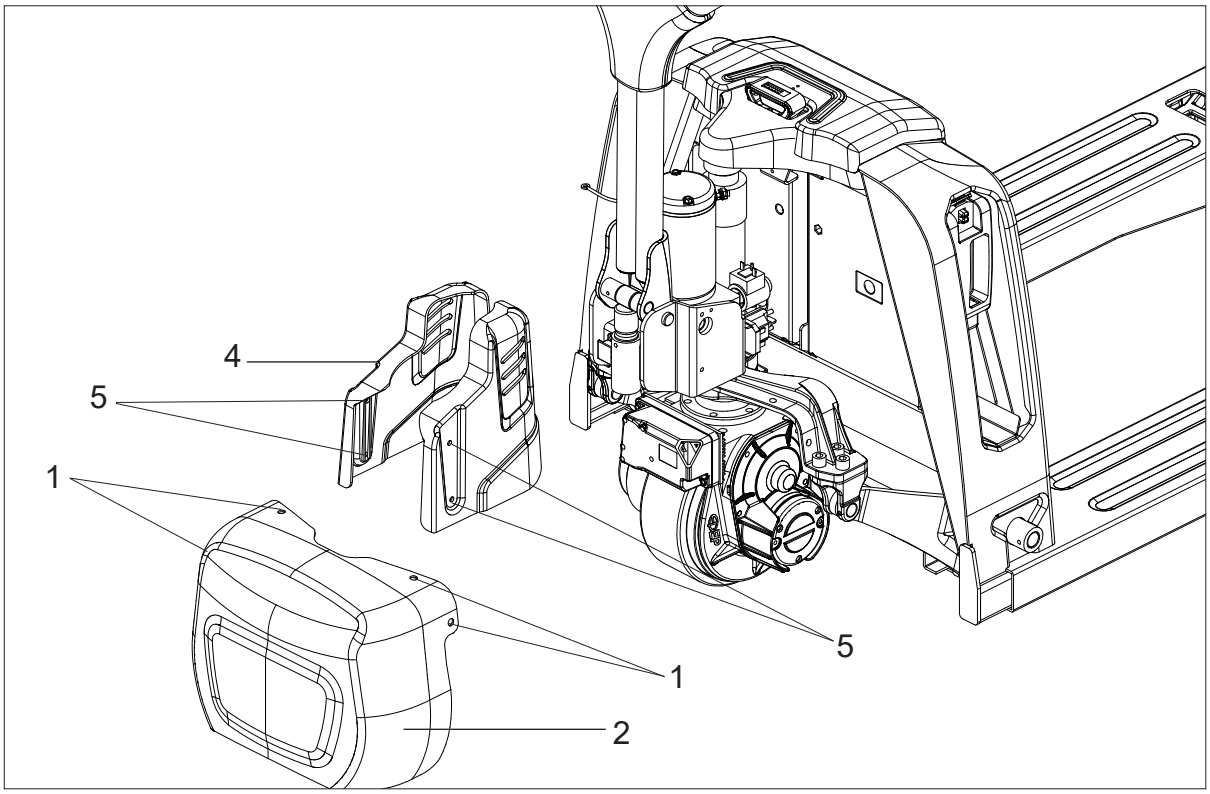

Fig1154-00013OM

WARNING

Remove or install the drive cover, carefully clip hand !
When the drive cover is removed, it is dangerous and does not allow operation of the truck.

1.3.3 How to add hydraulic oil

- It is necessary to add hydraulic oil when you heard explosion sound from pipe during lifting.
- Prepare the truck for maintenance and repairs (See Maintenance Instructions).
- Remove the hydraulic cover， and take out oil return pipe and connector(1);(See chapter D Section1.3.2).
- Prepare a measuring tool, a diameter of less than 8mm, about 100mm length of the round rod, the round rod from the filling port about 30~40mm, add hydraulic oil until it hits the oil surface.
- Add hydraulic oil till you can't hear explosion sound during lifting any more.
- Re-installation in the reverse order.

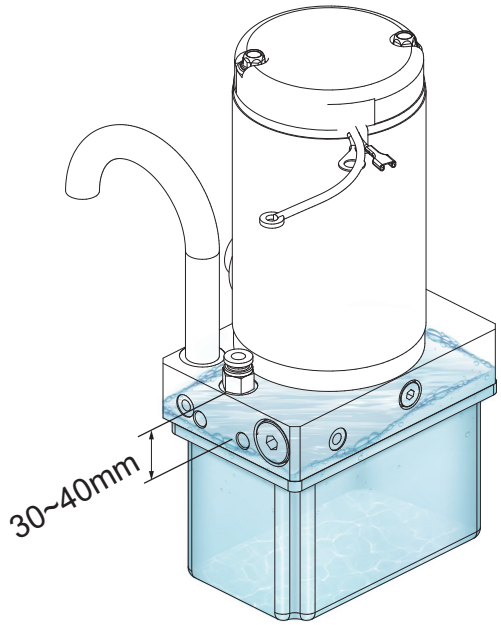

WARNING

Prohibit the amount of hydraulic oil cannot overflow the refueling port.
The round rod should be clean and resistant to corrosion.

1.3.4 How to add grease

- Prepare the truck for maintenance and repairs (See Maintenance Instructions).
- Remove the driving cover.(See chapter D Section1.3.2)
- Add grease of the correct grade (See chapter D Table 1 Lubricants).

Re-installation in the reverse order.

WARNING

It is forbidden to add hydraulic oil with impurity.

1.3.5 Checking the fuses

- Fully lower the forks.
- Pull out the plug handle.
- Remove the hydraulic cover(See chapter D Section1.3.2)
- Fuse 5A installed on main harness. Replace if necessary,

1.4 Recommissioning

The truck may only be recommissioned after cleaning or repair work, once the following operations have been performed.

- Test horn.
- Test emergency brake switch.
- Test brake.
- Lubricate the truck in accordance with the maintenance point.
- Do follow the daily checklist.

1.5 Final decommissioning, disposal

Final, proper decommissioning or disposal of the truck must be performed in accordance with the regulations of the country of application. In particular, regulations governing the disposal of batteries, fuels, Hydraulic oil, plastic and electronic and electrical systems must be observed.

1.6 Tire replacement

The quality of tyres affects the stability and performance of the truck. When replacing tyres fitted at the factory, only use the manufacturer's original spare parts. Otherwise the data sheet specifications of the truck cannot be guaranteed. When changing wheels and tyres, ensure that the truck does not slew (e.g. when replacing wheels always left and right simultaneously).

WARNING

Only original tires have been certified by our quality assurance service. To ensure safe and reliable operation of the fork truck, only tires of the manufacturer must be used.

E Technical data

Standard Version Specifications

Technical specification details in accordance with VDI 2198. Technical modifications and additions reserved.

Performance data for standard trucks

Distinguishing mark				
1.1	Manufacturer			EP
1.2	Model designation			F4201
1.3	Drive unit			Battery
1.4	Operator type			Pedestrian
1.5	rated capacity	Q	kg	2000
1.6	Load center distance	c	mm	600
1.8	Load distance	x	mm	950
1.9	Wheelbase	y	mm	1180
Weight				
2.1	Service weight (include battery)		kg	140
2.2	Axle loading, laden driving side/loading side		kg	620/1520
2.3	Axle loading, unladen driving side/loading side		kg	100/40
Types,Chassis				
3.1	"Tyre type driving wheels/loading wheels"			PU/PU

3.2.1	Tyre size, driving wheels(diameter×width)		mm	Φ210x70
3.3.1	Tyre size, loading wheels(diameter×width)		mm	Φ80x60
3.4	Tyre size, caster wheels(diameter×width)		mm	74mm×30mm
3.5	Wheels, number driving, caster/loading (x=drive wheels)		mm	1x,-/4
3.6.1	Track width, front,driving side	b10	mm	/
3.7.1	Track width,rear,loading side	b11	mm	410/(535)
Dimensions				
4.4	Lift height	h3	mm	105
4.9	Height drawbar in driving position min./max.	h14	mm	750/1190
4.15	Lowered height	h13	mm	85
4.19	Overall length	l1	mm	1550
4.20	Length to face of forks	l2	mm	400
4.21	Overall width	b1/ b2	mm	695(590)
4.22	Fork dimensions	s/ e/ l	mm	50x150x1150
4.25	Distance between fork-arms	b5	mm	560(685)
4.32	Ground clearance, center of wheelbase	m2	mm	30
4.34.1	Aisle width for pallets 1000 × 1200 crossways	Ast	mm	2160
4.34.2	Aisle width for pallets 800 × 1200 lengthways	Ast	mm	2025
4.35	Turning radius	Wa	mm	1360
Performance data				
5.1	Travel speed, laden/ unladen	km/ h	km/h	4.5/5
5.2	Lifting speed, laden/ unladen		m/ s	0.016/0.020

5.3	Lowering speed, laden/ unladen		m/ s	0.058/0.046
5.8	Max. gradeability, laden/ unladen		%	8\16
5.10	Service brake type			Electroma gnetic
Electric-engine				
6.1	Drive motor rating S2 60 min		kW	0.9
6.2	Lift motor rating at S3 15%		kW	0.7
6.4	Battery voltage/nominal capacity K5		V/ Ah	48/20
6.5	Battery weight		kg	10
6.6	Energy consumption according to DIN EN 16796		kWh/h	0.18 [1)]
6.7	Turnover output according to VDI 2198		t/h	88
6.8	Turnover efficiency according to VDI 2198		t/kWh	473.12
Addition data				
8.1	Type of drive control			DC
10.5	Steering type			mechanical
10.7	Sound pressure level at the driver's ear		dB (A)	74

a=200mm

Dimension

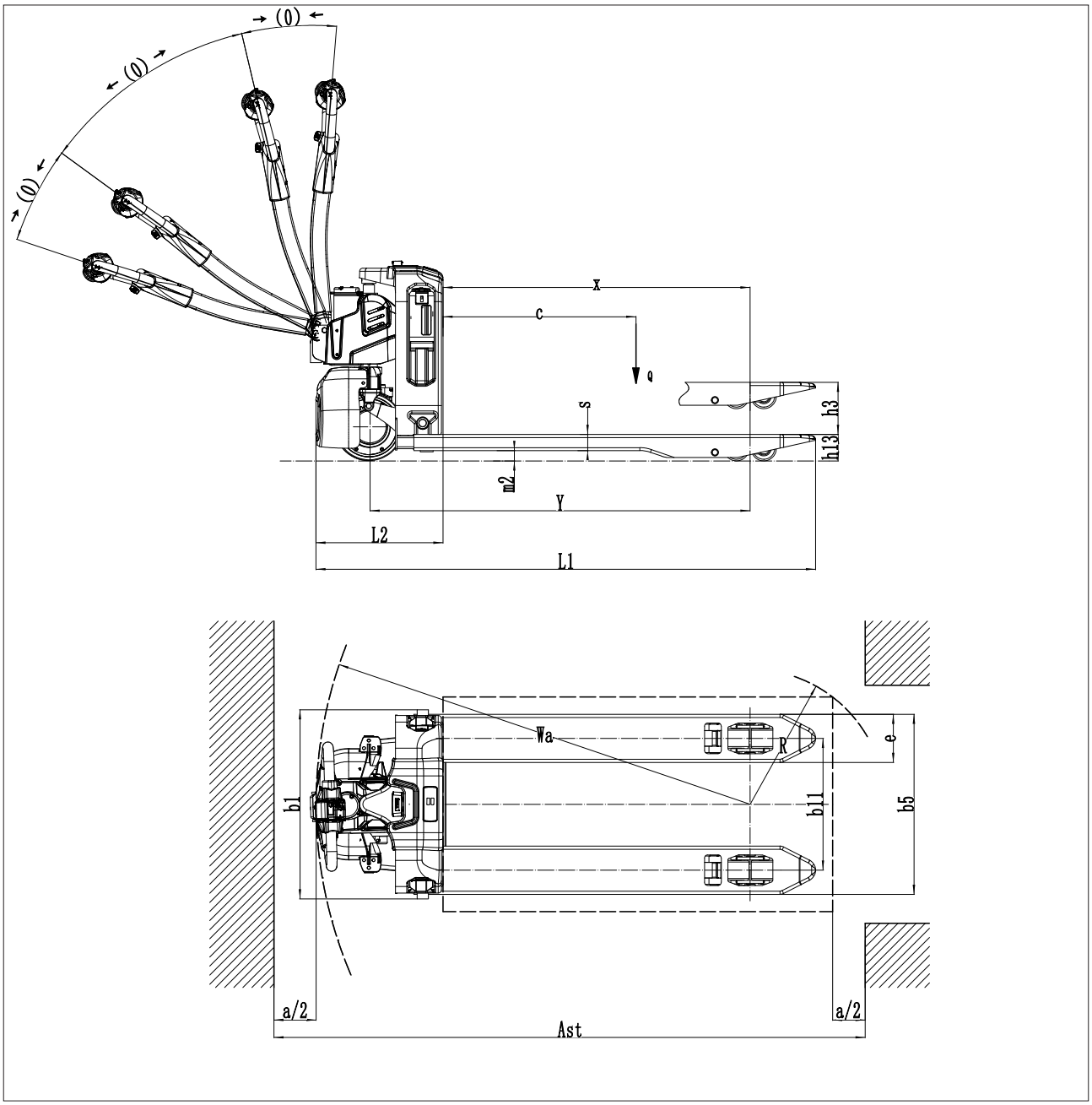

APPENDIX Lithium-ion battery

1 Information on the conformity of lithium-ion batteries

- The manufacturer of the lithium-ion battery declares that: the lithium-ion battery conforms with the provisions of the following EU directive 2014/30/EU and Electromagnetic Compatibility Regulations 2016 (SI 2016 No.1091) in accordance with EN12895.
- These batteries has been certified according to EN 62619:2017 for safe use and according to UN38.3 for safe transport.

2 It is necessary to respect the following guidelines:

•Read the documents provided with the battery carefully.
•Only persons who have been trained to work with lithium-ion technology are permitted to work on the batteries (for example After-Sales Service Centre technicians).
•Do not drop it or allow anything to fall on it.
•Do not expose the battery unit to humidity or water ($>$ 80%).
•Protect the battery from solar irradiation.
•Do not physically machine or modify the battery.
•Do not open the battery. Electrical risk. Only the After-Sales Service Centre technicians can open the battery.
•Do not place lithium-ion batteries on or near flames or hot heat sources (> 65°C). This may cause the batteries to overheat or burst into flames. This type of use also impairs the performance of the batteries and reduces their service life.
•It is forbidden to take out the battery in the charging state state.
•It is forbidden to use and store the battery at low power (the use and storage of power loss will cause the early loss of battery system capacity and accelerate the service life of the battery pack);
•During the charging process, liquid and metal substances are not allowed on the charger, and it is forbidden to use the charger in a high temperature and high humidity environment;
•It is forbidden for unqualified personnel to dismantle and overhaul the battery system and supporting charger and other devices; the battery system is a dangerous product, and maintenance and replacement can only be performed by professionals;
•Before the vehicle is started, power on through the button switch. After the vehicle is stopped, the battery system must be powered off and stopped through the button switch, which can be judged by the state of the display screen. If the time is too long, the battery will be over-discharged. In severe cases, it will affect the battery performance);
• The battery should be fully charged for the first time;
• After each use, it should be charged in time (the initial state of charging should keep the battery system temperature below 40° C to ensure the smoothness of charging);
• Use water-based extinguishers,CO_2, dry chemical fire extinguishers.
• Do only use in trucks manufactured by EP and if the battery type is released for that truck.

3 Intended use

- humidity $<$ 80%;
- Charging application temperature 5° C-40° C;
- The battery's maximum operation altitude is up to 2000m;
- Do not pull out the battery for emergency stopping, use instead the supply (see page B13).
- The truck shall not be used in a potentially explosive atmosphere or in an especially dusty environment.

4 Reasonably foreseeable misuse

•Never short circuit the battery terminals.
•Do not reverse the battery polarity.
•Do not overcharge.

DANGER

Failure to comply with these safety instructions can result in fire and explosion or the leakage of harmful materials.

5.Accessories

Do not use a charger that is not released by EP for lithium-ion battery.

WARNING

Should such issues as failing to abide by the operation manual, failing to use the original parts for maintenance or damaging caused by users themselves occur, the quality guarantee will be invalid automatically!

6.BMS (Battery Management System)

The battery is permanently monitored by the BMS (Battery Management System).
This provides the communication with the truck.
The BMS continually monitors items such as the cell temperature, the voltage and the charge status of the cells.

7 Safety and warning

•Abide by the operation manual!
•All the operations related to the storage battery must be implemented under the instruction of professionals!

Always wear protective clothing (e.g. safety goggles and safety gloves) when working on cells and batteries.

•No smoke and fire!
•Avoid the existence of open fire, fiery metal wire or sparks around the storage battery, otherwise explosion or fire disaster may occur!

•Explosion or fire disaster is likely to occur; avoid short circuit!
•Keep the battery away from all fire sources, heat sources and flammable or explosive materials.

•Don’t knock over the storage battery!
•Using lifting and delivery devices as specified. Prevent the storage battery cell, interface and connection cable from being damaged by the lifting hook!
•If the materials leak out, do not inhale the fumes. Wear safety gloves.

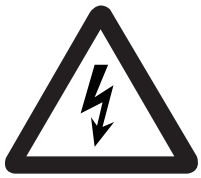

•Dangerous voltage!
•Avoid hot plugging!
•Notice: the metal part of the storage battery cell is electrified, so don’t place any external object or tool on the battery cell!

Do not place the battery on top of conductive objects.

•Don’t trample on the battery to prevent it from fierce shaking or shacking!

8 Hazard of faulty or discarded battery

Please monitor the battery status when in use and in storage. If you find any broken batteries, electrolyte leakage, abnormal expansion or pungent odors due to shipping damage or abnormal vibration, please stop use immediately and keep at least a 5 meter perimeter around the effected batteries. Please dispose of the damaged batteries properly and contact a recycling company to recycle the batteries. For batteries that are under EP warranty policy, EP will access the warranty claim according to your submission of the battery nameplate photo .
During the period waiting for disposal or recycle, please stock damaged and old batteries carefully by following instructions:
1.Damaged and discarded battery temporary storage needs to be placed in an iron or plastic container with water that can cover whole battery at least 5 days (The battery may emit smoke when immersed in water. This is the process of consuming energy by the leaking battery, which is a normal reaction).

- Keep the container and batteries outdoors and 5 meters away from other things, especially flammable items.
- Use protective gloves when putting batteries in or out of water.
- Do not stack damaged or old batteries.

2.For big battery with inner and outer boxes structure, Keep the batteries outdoors at least 5 days. and contact a recycling company to recycle the batteries.

WARNING

1. Do not store the battery for a long time;
2. No load bearing, squeezing and contact stacking when storing the batteries;
3. Do not place the batteries near cargo warehouses or near flammable and explosive dangerous goods.

9 Transportation

Before transporting any lithium-ion battery, check the current regulations on the transport of dangerous goods. Comply with these when preparing the packaging and transport. Train authorised staff to dispatch lithium-ion batteries.

NOTE

It is recommended that the original packaging is kept for any subsequent dispatch.
A lithium-ion battery is a special product.
Special precautions should be taken when:

- *Transporting a truck equipped with alithium-ion battery*
- *Transporting only the lithium battery*

A class 9 danger label must be affixed to the packaging for transport.
It is different if the battery is transported on its own or in a truck. An example of a label appears in this supplement(see figure below). Refer to the latest current regulations before dispatch as the information might have changed since this supplement was written.
Special documents must be sent with the battery. Refer to the applicable standards or regulations.

For UN3480	Lithium Ion Batteries	
For UN3481	Lithium Ion Batteries packed with Equipment or Lithium batteries built into Equipment	

WARNING

Do not pack higher than 1.2 m above the floor of the container and secure properly.

NOTE

"Overpack" is the name for the outer packaging of the dangerous goods.

NOTE

Recharge the lithium-ion battery before transporting it taking account of the transport mode (boat, road). Excessive discharge on arrival could damage the performance of the battery.

10 Shipping faulty batteries

To transport these faulty lithium-ion batteries, contact the manufacturer's customer service department. Faulty lithium-ion batteries must not be transported independently.

11 Instructions for disposal

• Lithium ion batteries must be disposed of in accordance with the relevant environmental protection regulations.
• Used cells and batteries are recyclable economic goods. In accordance with the mark showing a crossed rubbish bin, these batteries may not be disposed of as domestic waste. Return and / or recycling must be ensured as required by the Batteries Legislation.
• The method of battery recovery and reuse can be discussed with our company. We reserve the right to change the technology.

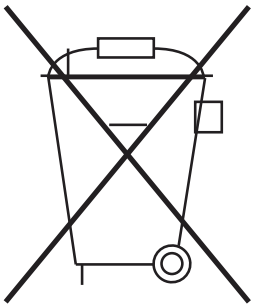

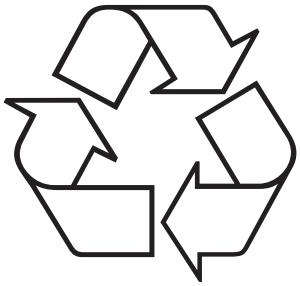

➢ The requirements of recycling

1.Only authorized EP dealers who have attended the after sales training, are authorized to do repairs on EP batteries.
2.All Li-ion battery should be placed in safe place according to the EP Li-ion battery Manual;
3.The transport of Li-ion battery must meet local regulation, EP will supply UN38.3 and MSDS files according with UN and ADR regulation;
4.The package of Li-ion battery before delivery must meet the UN 3480 or local carrier regulation;

WARNING

1.Check the status of used batteries regularly and dispose of the batteries in time;
2.Do not store used batteries for extended periods;
3.Do not load bearing, squeezing or contact stacking when storing batteries;
4.Do not keep batteries in cargo warehouses or near flammable and explosive dangerous goods.

WARNING

Don't bump, handle gently.

Used cells and batteries are recyclable economic goods. In accordance with the mark showing a crossed rubbish bin, these batteries may not be disposed of as domestic waste. Return and / or recycling must be ensured as required by the Batteries Act (Act regarding the commissioning, return and environmentally responsible disposal of batteries and accumulators). For battery disposal please contact the manufacturer's customer service department.

12 Charging

- This battery can only be charged with the vehicle-specific charger, other chargers may cause battery damage.
- The normal charging temperature range of the battery is: 5°C ~ 40°C, please do not charge in the environment beyond the normal temperature range;
- If the battery is not fully charged in specified time, check the max. voltage of the cells of the battery, if it is higher than 3.65V, stop charging it immediately, and contact the after-sales service.
- During the charging operation, it is necessary to have professional personnel to operate and care, in order to ensure that the charging plug and socket work normally without heat, to ensure that the charging device works normally, to ensure that the battery pack and its protection circuit work normally, and the whole power supply system has no sign of short circuit, over current, over temperature or overcharge.
- When charging, connect the battery to the charger; after starting charging, the circular display meter will display the total voltage, the maximum and minimum cell voltages, power, temperature, charging current and other information; pay particular attention to the charging current and the maximum and minimum cell voltages, as well as the voltage difference between them; if there is abnormality, stop charging in time and contact the after-sales service department for solutions.
- Charging in non-charging area is prohibited;
- No modification of vehicles;
- Do not use irregular charging sockets;
  The net height of the charging area shall be higher than 5m, and the safe distance from other areas shall be greater than 5m.

13 Storage

Before a long period of inactivity, the battery must be fully charged.
We recommend that batteries are stored at a height between 60 and 120 cm.

•Store the battery in a dry place at a temperaturebetween 0 and 40° to preserve its service life. This area must not be hermetically sealed to allow air renewal;

•If the battery system needs to be placed on hold for a long time, it would better keep the battery in the semi-electric state and charge the battery every 2 months to ensure that the battery system is in the semi-electric state;

•The positive and negative terminals of the battery system are prohibited from contacting with metal objects during storage.

14 Common Problems and Solutions

During the use and maintenance of the lithium-ion battery, the battery or battery system may have one or more of the following abnormal conditions, please organize the professional engineers and technicians to perform the necessary processing according to the instructions in this manual; if you have any questions about the status or solutions, please contact ep dealer or after-sales service department of the company to obtain professional technical support.

- If the battery is found to have abnormal mechanical characteristics such as swelling, cracked casing, melted casing, and distortion of the casing before and during installation, stop using the battery immediately, place it in open and well-ventilated space, and contact the after-sales service.
- If abnormalities such as looseness, cracks, cracks in the insulation layer, burn marks, etc. of the battery's pole pressing bolts, conductive strips, main circuit wires and connectors are found before and during the installation, stop using the battery immediately, check the reason for analysis and give it a fix;
- If the polarity of the positive and negative terminals of the battery is found not match the polarity identification before installation, please stop using the battery immediately and contact the after-sales service department to replace the battery or obtain other solutions;
- If there is fire or smoke happens to the battery, move it to the open air immediately, evacuate people in time, and pour a large amount of cold water onto the battery to cool it down and put out the fire.
- If you find any broken batteries, electrolyte leakage, abnormal expansion or pungent odors due to shipping damage or abnormal vibration, please stop use immediately and keep at least a 2 meter perimeter around the effected batteries . Please dispose of the damaged batteries properly and contact a recycling company to recycle the batteries(see section 9.1).

15.Service

Daily Maintenance

No.	Maintenance content	Method of operation	Note	Frequency
1	Check if battery capacity is too low	Check instrumentation SOC display	Make sure the battery is not stored without charge for a long time. If the battery system needs to be put on hold for a long time, it is best to keep the battery in half power state and charge the battery every 3 months to ensure that the battery system is in half power state.	Everyday
2	The battery pack charge and discharge current	Check instrumentation display	make sure battery pack charge and discharge current meet with operation manual	Everyday
3	Connector pins at the bottom of the battery(if necessary)	Perform a visual inspection	If any ablation or deformation occurs in daily inspection, the battery connector pins should be replaced in time.	Everyday
4	Check whether the appearance is deformed, whether the surface is oxidized, paint removing, the mounting position is offset, and the cabinet is damaged;	Perform a visual inspection	check the reason for analysis and give it a fix	Everyday
5	Check the entire battery as well as the surface beneath it for signs of fluid leakage.	Perform a visual inspection	check the reason for analysis and give it a fix	Everyday

No.	Maintenance content	Method of operation	Note	Frequency
6	Clean the lithium battery and charger with a dry cloth or compressed air.	Perform a visual inspection, Wear insulated gloves and shake it gently	Make sure it tight	weekly
7	Whether the external wiring harness has worn, imprint, creases and exposed line core	Perform a visual inspection	Make the wiring harness fixed well	weekly
8	Check that the surface of lithium-ion battery looks clean	No dust, no water, no corrosion, oxidation, rust, etc.	Clean surface if you found dust, corrosion, oxidation, rust by using dustless cloth or air compressor ,water battery is strictly prohibited to use	weekly
9	Check that the outside screws of the battery are fastened	Torque wrench correction requires no loosening	Reinforce screws	weekly
10	Check for water or foreign matter in the plug and socket and check for rust or charring(if necessary)	Perform a visual inspection	check the reason for analysis and give it a fix	Monthly
11	Check the cable for damage and loose joints(if necessary)	Perform a visual inspection	check the reason for analysis and give it a fix	Monthly
12	Check the battery case for abnormalities such as cracks, deformation, and bulging.	Perform a visual inspection	check the reason for analysis and give it a fix	Monthly

NOTE

The EP instrumentation is used for serviced.

➢ Cleaning

The manufacturer recommends to only use compressed air at less than 207 kPa (30 psi) or a slightly damp towel to clean the battery. The battery, or its charging station, may be equipped with fans, heat sinks, or other cooling devices that require periodic cleaning. Always know and follow the battery manufacturer's recommendations for cleaning and service.

➢ Optimize Battery Life

Always use and follow the battery management system (BMS). The BMS is the electronic system that monitors battery data and use that data to its operating environment to influence the battery's safety, performance, and service life. It also functions as a safety cut-off device in case of overcharging, overcurrent, or overheating. Lithium-ion battery life is greatly reduced if used outside a temperature range of 0ºC to 40ºC (32ºF to 104ºF) or in an environment with greater than 85% humidity. EP recommends to opportunity charge lithium-ion batteries.
This is when the battery is recharged for short intervals during a shift period. It reduces or eliminates the need for long charging periods, changing batteries during a shift, and extending shift periods.